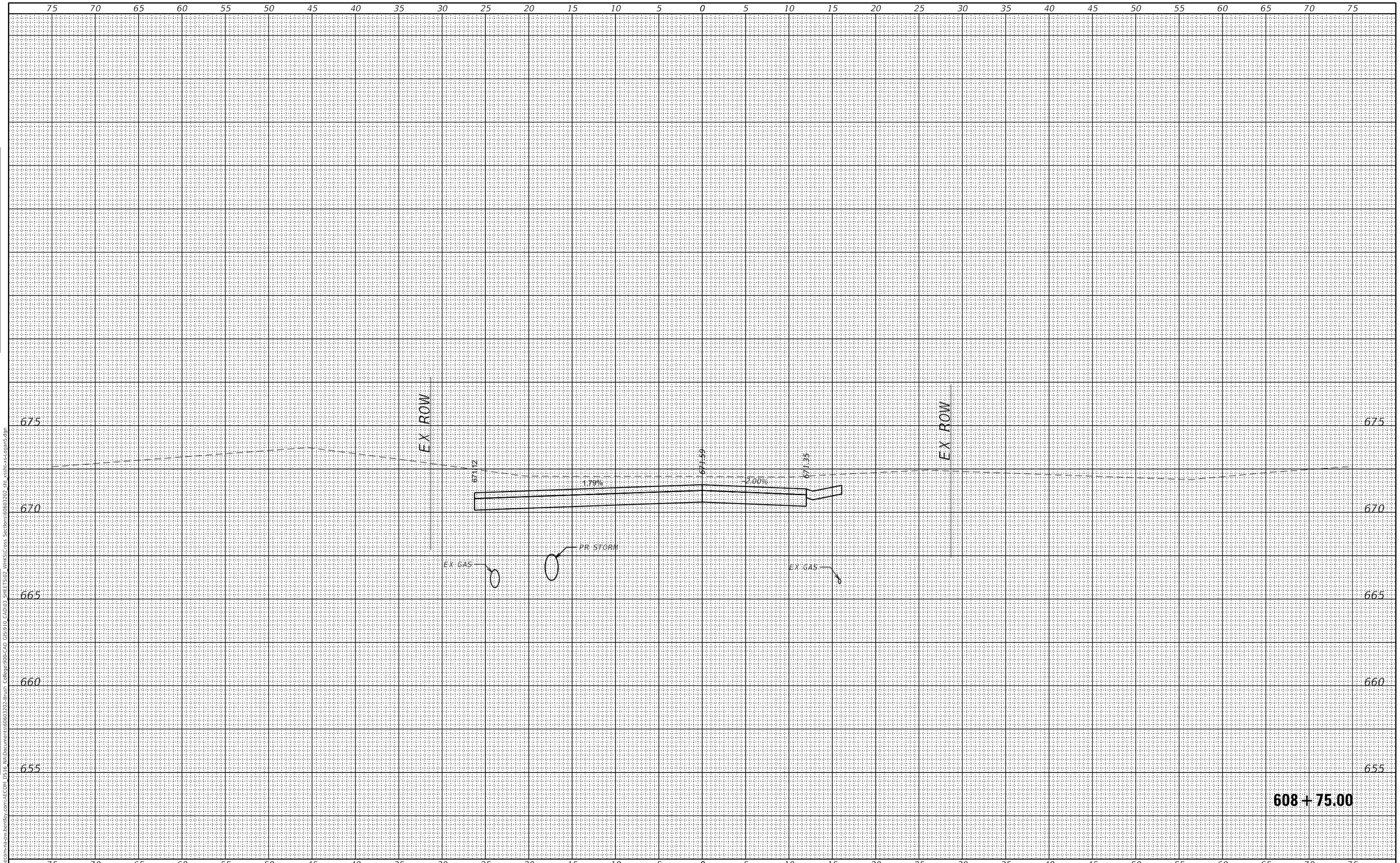

FINAL SURVEY		BY	DATE
NOTE BOOK	SURVEYED		
	PLOTTED		
	TEMPLATE		
	AREAS		
NO.	AREAS CHECKED		

ORIGINAL SURVEY		BY	DATE
NOTE BOOK	SURVEYED		
	PLOTTED		
	TEMPLATE		
	AREAS		
NO.	AREAS CHECKED		

MODEL: Default
FILE NAME: pw:\\aecom-na-pw.bentley.com:AECOM DS16 NA\Document\60603202-Brush College\900-CAD GIS\910 CAD\03 SHEETS\02 WHKS\Cross Sections\60603202 sht xssh-xs-Logan5.dgn

design firm no. 184001036

whks engineers + planners + land surveyors

USER NAME = $OPERATOR$	DESIGNED - -	REVISED
	CHECKED - -	REVISED
PLOT SCALE = 10.0000 ' / in.	DRAWN - -	REVISED
PLOT DATE = 10/30/2020	CHECKED - -	REVISED

STATE OF ILLINOIS
DEPARTMENT OF TRANSPORTATION

EAST LOGAN STREET
CROSS SECTIONS

SCALE: 1" = 5' | SHEET 45 OF 49 SHEETS | STA. 608+75.00 TO STA. 608+75.00

F.A.U. RTE.	SECTION	COUNTY	TOTAL SHEETS	SHEET NO.
7448	09-00933-01-BR	MACON	996	869

CONTRACT NO. 6WGY(165)

ILLINOIS | FED. AID PROJECT

FINAL SURVEY		BY	DATE
	SURVEYED		
	PLOTTED		
NOTE BOOK	TEMPLATE		
	AREAS		
NO.	AREAS CHECKED		

ORIGINAL SURVEY		BY	DATE
	SURVEYED		
	PLOTTED		
NOTE BOOK	TEMPLATE		
	AREAS		
NO.	AREAS CHECKED		

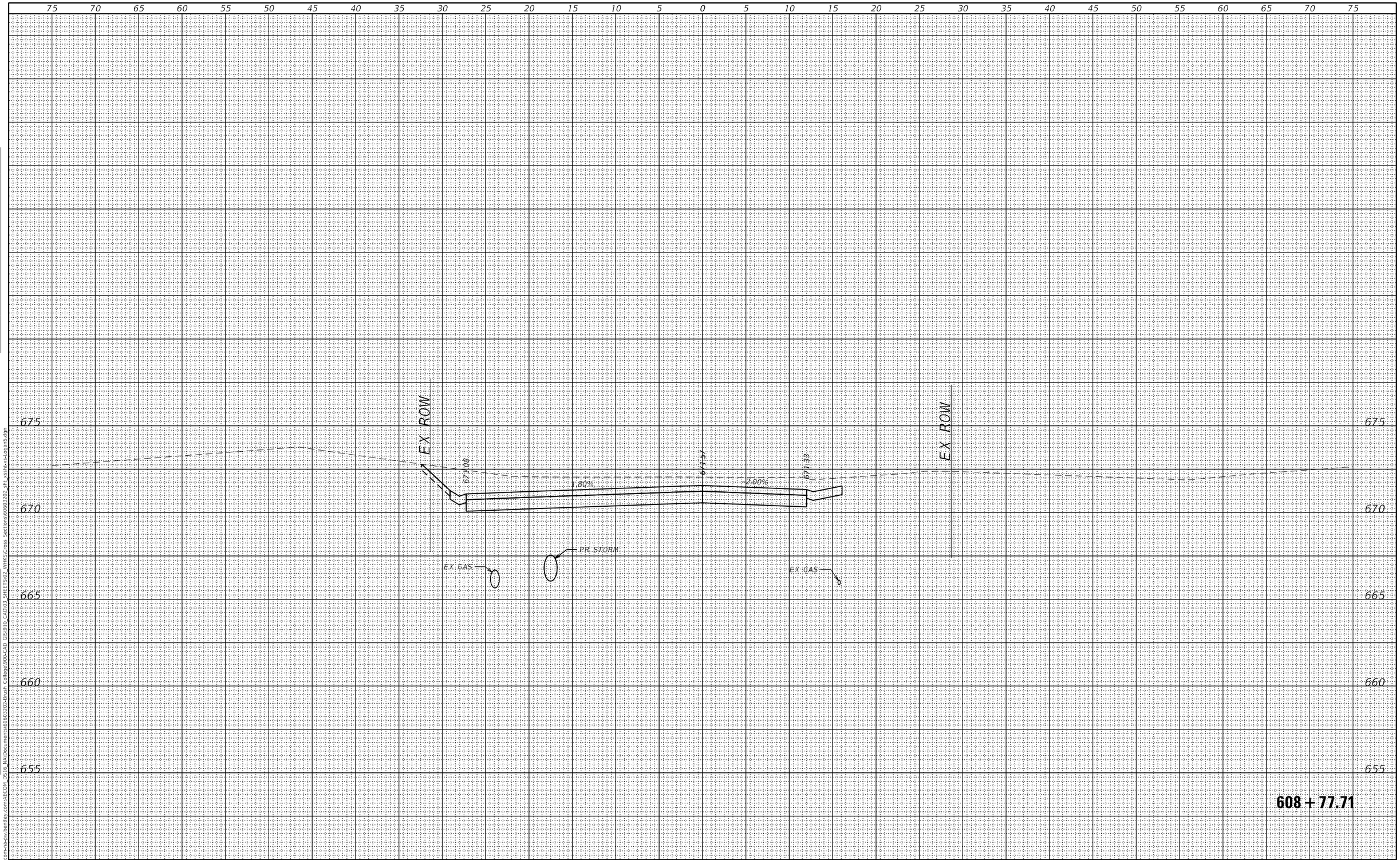

MODEL: Default
FILE NAME: pw:\\aecom-na-pw.bentley.com:AECOM DS16 NA\Document\60603202-Brush College\900-CAD GIS\910 CADD\3 SHEETS\02 VHKS\Cross Sections\60603202 sht xssh-xs-Logan5.dgn

design firm no. 184001036

whks
engineers + planners + land surveyors

USER NAME = $OPERATOR$	DESIGNED - -	REVISED	
	CHECKED - -	REVISED	
PLOT SCALE = 10.0000 ' / in.	DRAWN - -	REVISED	
PLOT DATE = 10/30/2020	CHECKED - -	REVISED	

STATE OF ILLINOIS
DEPARTMENT OF TRANSPORTATION

EAST LOGAN STREET
CROSS SECTIONS

SCALE: 1" = 5' | SHEET 46 OF 49 SHEETS | STA. 608+77.71 TO STA. 608+77.71

F.A.U. RTE.	SECTION	COUNTY	TOTAL SHEETS	SHEET NO.
7448	09-00933-01-BR	MACON	996	870

CONTRACT NO. 6WGY(165)

ILLINOIS | FED. AID PROJECT

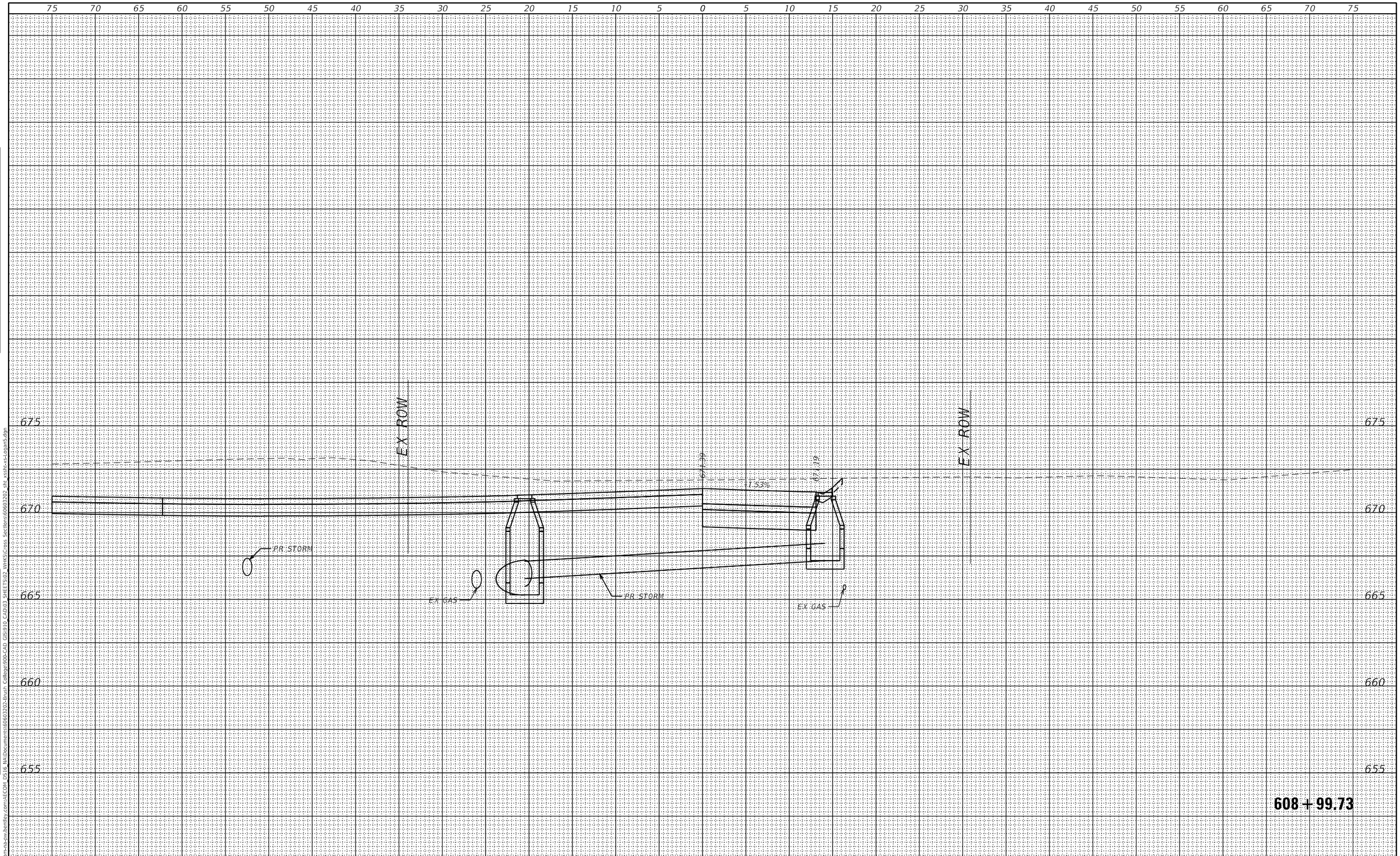

FINAL SURVEY		BY	DATE
	SURVEYED		
	PLOTTED		
NOTE BOOK	TEMPLATE		
	AREAS		
	AREAS CHECKED		
NO.			

ORIGINAL SURVEY		BY	DATE
	SURVEYED		
	PLOTTED		
NOTE BOOK	TEMPLATE		
	AREAS		
	AREAS CHECKED		
NO.			

MODEL: Default
FILE NAME: pw:\\aecom-na-pw.bentley.com:AECOM DS16 NA\Documents\60603202-Brush College90b-CAD GIS\910 CAD\03 SHEETS\02 VHKS\Cross Sections\60603202 sht xsshc-xs-Logan5.dgn

design firm no. 184001036
whks
engineers + planners + land surveyors

USER NAME = $OPERATOR$	DESIGNED - -	REVISED	
	CHECKED - -	REVISED	
PLOT SCALE = 10.0000 ' / in.	DRAWN - -	REVISED	
PLOT DATE = 10/30/2020	CHECKED - -	REVISED	

STATE OF ILLINOIS
DEPARTMENT OF TRANSPORTATION

EAST LOGAN STREET
CROSS SECTIONS

SCALE: 1" = 5' | SHEET 47 OF 49 SHEETS | STA. 608+99.73 TO STA. 608+99.73

F.A.U. RTE.	SECTION	COUNTY	TOTAL SHEETS	SHEET NO.
7448	09-00933-01-BR	MACON	996	871

CONTRACT NO. 6WGY(165)
ILLINOIS | FED. AID PROJECT

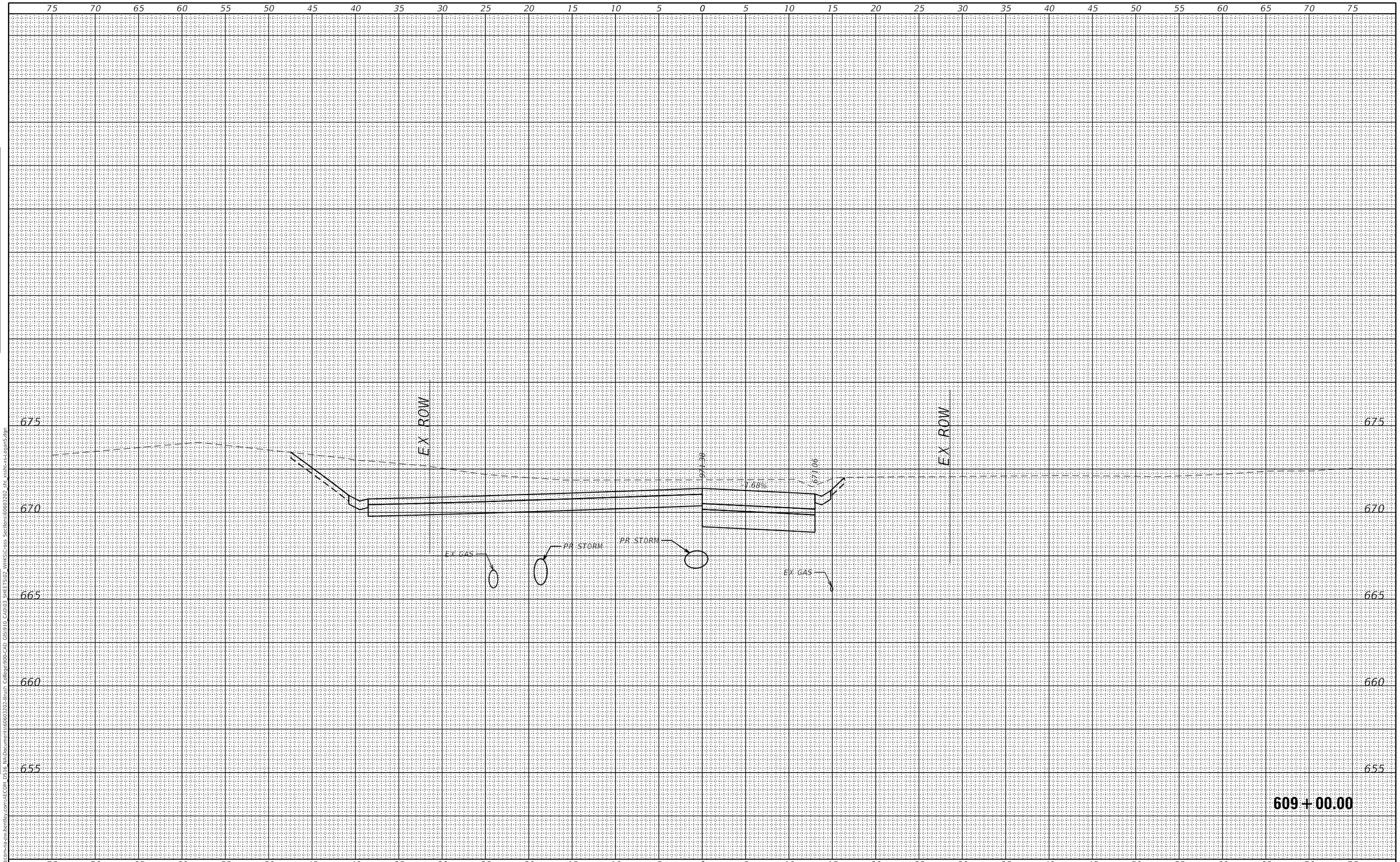

FINAL SURVEY		BY	DATE
	SURVEYED		
	PLOTTED		
NOTE BOOK	TEMPLATE		
	AREAS		
NO.	AREAS CHECKED		

ORIGINAL SURVEY		BY	DATE
	SURVEYED		
	PLOTTED		
NOTE BOOK	TEMPLATE		
	AREAS		
NO.	AREAS CHECKED		

MODEL: Default
FILE NAME: pw:\\aecom-na-sw.bentley.com:AECOM DS16 NA\Documents\60603202-Brush College90b-CAD GIS\910 CAD\03 SHEETS\02 VHKS\Cross Sections\60603202 sht xssht-xs-Logan5.dgn

design firm no. 184001036
whks
engineers + planners + land surveyors

USER NAME = $OPERATOR$	DESIGNED - -	REVISED	
	CHECKED - -	REVISED	
PLOT SCALE = 10.0000 ' / in.	DRAWN - -	REVISED	
PLOT DATE = 10/30/2020	CHECKED - -	REVISED	

STATE OF ILLINOIS
DEPARTMENT OF TRANSPORTATION

EAST LOGAN STREET
CROSS SECTIONS

SCALE: 1" = 5' | SHEET 48 OF 49 SHEETS | STA. 609+00.00 TO STA. 609+00.00

F.A.U. RTE.	SECTION	COUNTY	TOTAL SHEETS	SHEET NO.
7448	09-00933-01-BR	MACON	996	872

CONTRACT NO. 6WGY(165)

ILLINOIS | FED. AID PROJECT

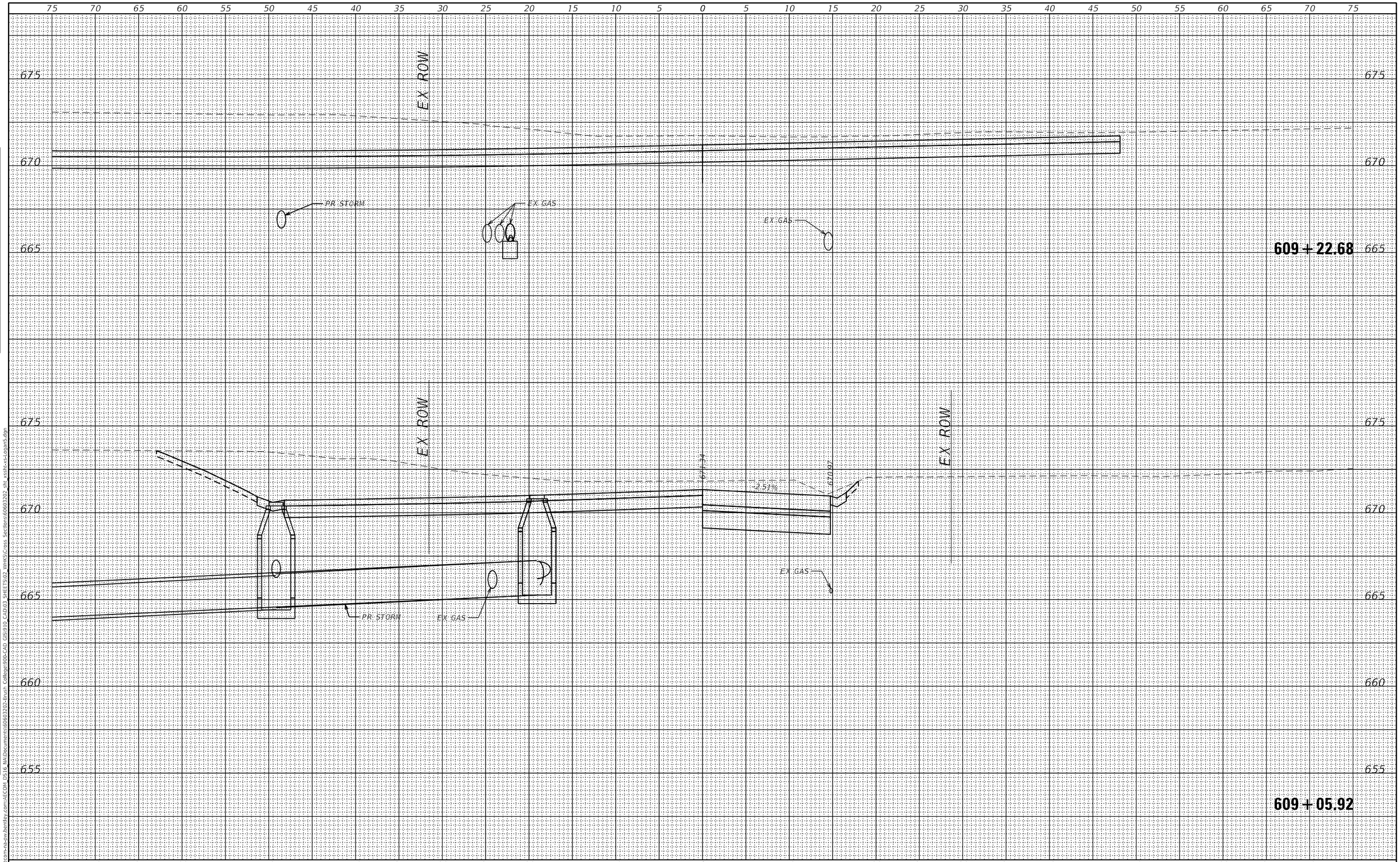

FINAL SURVEY	BY	DATE
SURVEYED		
PLOTTED		
TEMPLATE		
AREAS		
AREAS CHECKED		
NOTE BOOK NO.		

ORIGINAL SURVEY	BY	DATE
SURVEYED		
PLOTTED		
TEMPLATE		
AREAS		
AREAS CHECKED		
NOTE BOOK NO.		

MODEL: Default
FILE NAME: pw:\\aecom-na-pw.bentley.com:AECOM DS16 NA\Document\60603202-Brush College\900-CAD GIS\910 CAD\03 SHEETS\02 WHKS\Cross Sections\60603202 sht xssh-xs-Logan5.dgn

design firm no. 184001036
whks
engineers + planners + land surveyors

USER NAME = $OPERATOR$	DESIGNED - -	REVISED	
	CHECKED - -	REVISED	
PLOT SCALE = 10.0000 ' / in.	DRAWN - -	REVISED	
PLOT DATE = 10/30/2020	CHECKED - -	REVISED	

STATE OF ILLINOIS
DEPARTMENT OF TRANSPORTATION

EAST LOGAN STREET
CROSS SECTIONS

SCALE: 1" = 5' | SHEET 49 OF 49 SHEETS | STA. 609+05.92 TO STA. 609+22.68

F.A.U. RTE.	SECTION	COUNTY	TOTAL SHEETS	SHEET NO.
7448	09-00933-01-BR	MACON	996	873

CONTRACT NO. 6WGY(165)

ILLINOIS | FED. AID PROJECT

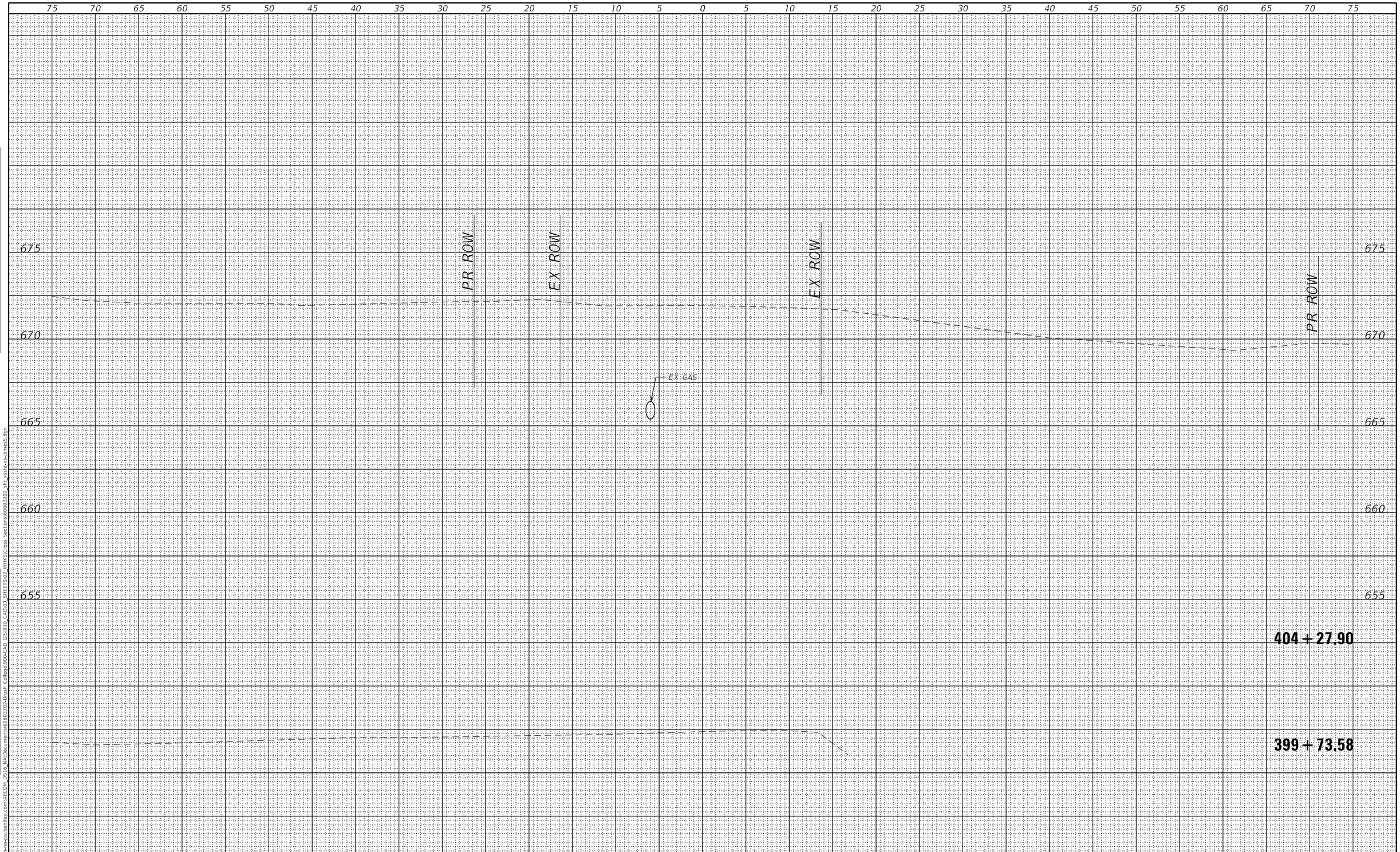

FINAL SURVEY		BY	DATE
	SURVEYED		
	PLOTTED		
NOTE BOOK	TEMPLATE		
	AREAS		
NO.	AREAS CHECKED		

ORIGINAL SURVEY		BY	DATE
	SURVEYED		
	PLOTTED		
NOTE BOOK	TEMPLATE		
	AREAS		
NO.	AREAS CHECKED		

MODEL: Default
FILE NAME: pw:\\aecom-na-sw.bentley.com:AECOM DS16 NA\Documents\60603202-Brush College90b-CAD GIS\910 CAD\03 SHEETS\02 VHKS\Cross Sections\60603202 sht xssht-vs-james5.dgn

design firm no. 184001036
whks
engineers + planners + land surveyors

USER NAME = $OPERATOR$	DESIGNED - -	REVISED
	CHECKED - -	REVISED
PLOT SCALE = 10.0000 ' / in.	DRAWN - -	REVISED
PLOT DATE = 10/30/2020	CHECKED - -	REVISED

STATE OF ILLINOIS
DEPARTMENT OF TRANSPORTATION

NORTH JAMES STREET
CROSS SECTIONS

SCALE: 1" = 5' | SHEET 1 OF 23 SHEETS | STA. 399+73.58 TO STA. 404+27.90

F.A.U. RTE.	SECTION	COUNTY	TOTAL SHEETS	SHEET NO.
7448	09-00933-01-BR	MACON	996	874

CONTRACT NO. 6WGY(165)

ILLINOIS | FED. AID PROJECT

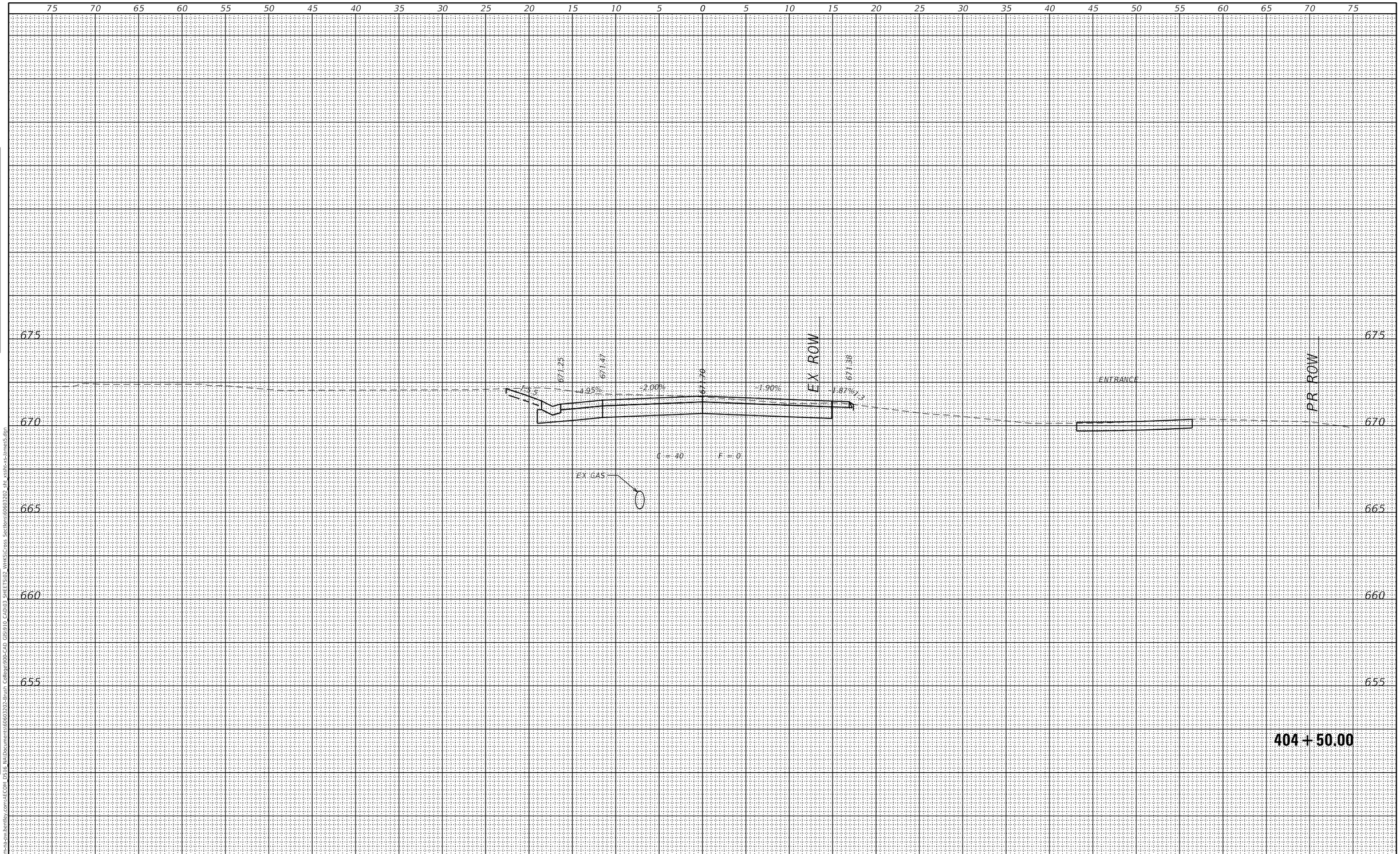

FINAL SURVEY	BY	DATE
SURVEYED		
PLOTTED		
TEMPLATE		
AREAS		
AREAS CHECKED		

NOTE BOOK
NO.

ORIGINAL SURVEY	BY	DATE
SURVEYED		
PLOTTED		
TEMPLATE		
AREAS		
AREAS CHECKED		

NOTE BOOK
NO.

MODEL: Default
FILE NAME: pw:\\aecom-na-pw.bentley.com:AECOM DS16 NA\Documents\60603202-Brush College90b-CAD GIS\910 CAD\03 SHEETS\02 VHKS\Cross Sections\60603202 sht xssht-xs-James5.dgn

design firm no. 184001036
whks
engineers + planners + land surveyors

USER NAME = $OPERATOR$	DESIGNED - -	REVISED	
	CHECKED - -	REVISED	
PLOT SCALE = 10.0000 ' / in.	DRAWN - -	REVISED	
PLOT DATE = 10/30/2020	CHECKED - -	REVISED	

STATE OF ILLINOIS
DEPARTMENT OF TRANSPORTATION

NORTH JAMES STREET
CROSS SECTIONS

SCALE: 1" = 5' | SHEET 2 OF 23 SHEETS | STA. 404+50.00 TO STA. 404+50.00

F.A.U. RTE.	SECTION	COUNTY	TOTAL SHEETS	SHEET NO.
7448	09-00933-01-BR	MACON	996	875

CONTRACT NO. 6WGY(165)

ILLINOIS | FED. AID PROJECT

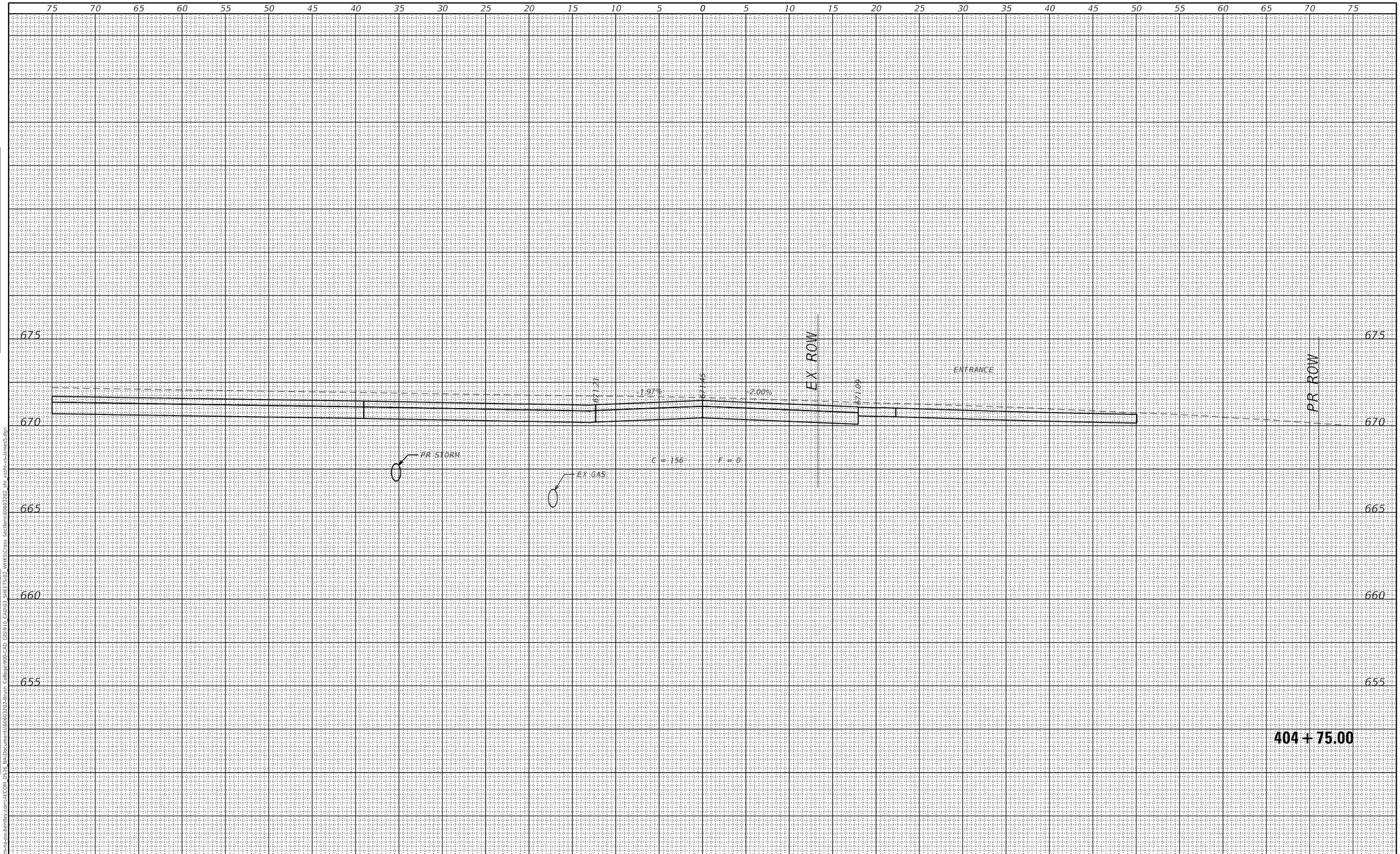

FINAL SURVEY		BY	DATE
NOTE BOOK	SURVEYED		
	PLOTTED		
	TEMPLATE		
	AREAS		
NO.	AREAS CHECKED		

ORIGINAL SURVEY		BY	DATE
NOTE BOOK	SURVEYED		
	PLOTTED		
	TEMPLATE		
	AREAS		
NO.	AREAS CHECKED		

MODEL: Default
FILE NAME: pw:\\aecom-na-sw.bentley.com:AECOM DS16 NA\documents\60603202-Brush College90b-CAD GIS\910 CAD\03 SHEETS\02 VHKS\Cross Sections\60603202 sht xssht-vs-james5.dgn

design firm no. 184001036
whks
engineers + planners + land surveyors

USER NAME = $OPERATOR$	DESIGNED - -	REVISED
	CHECKED - -	REVISED
PLOT SCALE = 10.0000 ' / in.	DRAWN - -	REVISED
PLOT DATE = 10/30/2020	CHECKED - -	REVISED

STATE OF ILLINOIS
DEPARTMENT OF TRANSPORTATION

NORTH JAMES STREET
CROSS SECTIONS

SCALE: 1" = 5' | SHEET 3 OF 23 SHEETS | STA. 404+75.00 TO STA. 404+75.00

F.A.U. RTE.	SECTION	COUNTY	TOTAL SHEETS	SHEET NO.
7448	09-00933-01-BR	MACON	996	876

CONTRACT NO. 6WGY(165)
ILLINOIS | FED. AID PROJECT

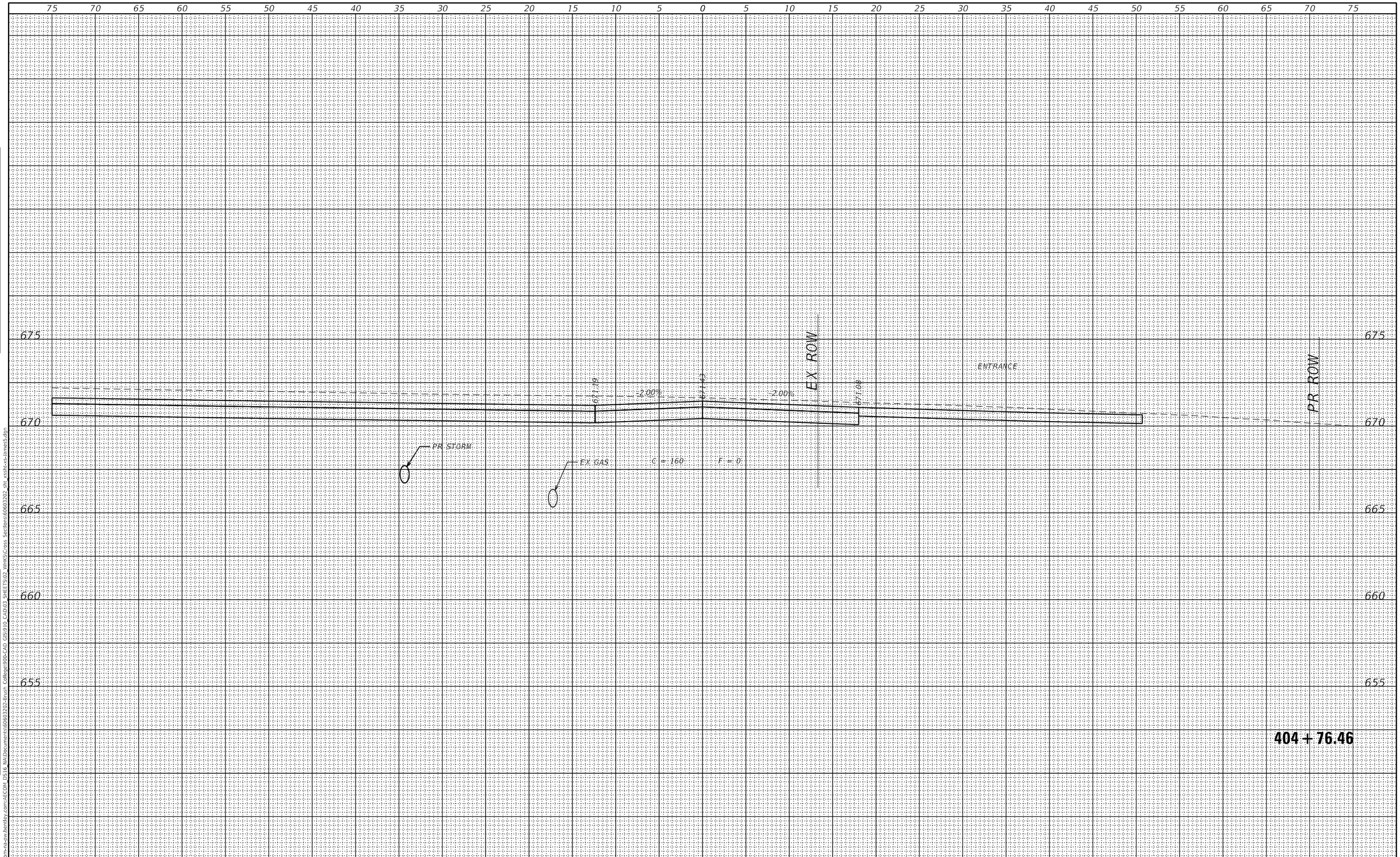

FINAL SURVEY		BY	DATE
NOTE BOOK	SURVEYED		
	PLOTTED		
	TEMPLATE		
	AREAS		
NO.	AREAS CHECKED		

ORIGINAL SURVEY		BY	DATE
NOTE BOOK	SURVEYED		
	PLOTTED		
	TEMPLATE		
	AREAS		
NO.	AREAS CHECKED		

MODEL: Default
FILE NAME: pw:\\aecom-na-pw.bentley.com:aECOM DS16 NA\Document\60603202-Brush College\900-CAD GIS\910 CAD\03 SHEETS\02 WHKS\Cross Sections\60603202 sht xssh-xs-James5.dgn

design firm no. 184001036
whks
engineers + planners + land surveyors

USER NAME = $OPERATOR$	DESIGNED - -	REVISED	
	CHECKED - -	REVISED	
PLOT SCALE = 10.0000 ' / in.	DRAWN - -	REVISED	
PLOT DATE = 10/30/2020	CHECKED - -	REVISED	

STATE OF ILLINOIS
DEPARTMENT OF TRANSPORTATION

NORTH JAMES STREET
CROSS SECTIONS

SCALE: 1" = 5' | SHEET 4 OF 23 SHEETS | STA. 404+76.46 TO STA. 404+76.46

F.A.U. RTE.	SECTION	COUNTY	TOTAL SHEETS	SHEET NO.
7448	09-00933-01-BR	MACON	996	877

CONTRACT NO. 6WGY(165)
ILLINOIS | FED. AID PROJECT

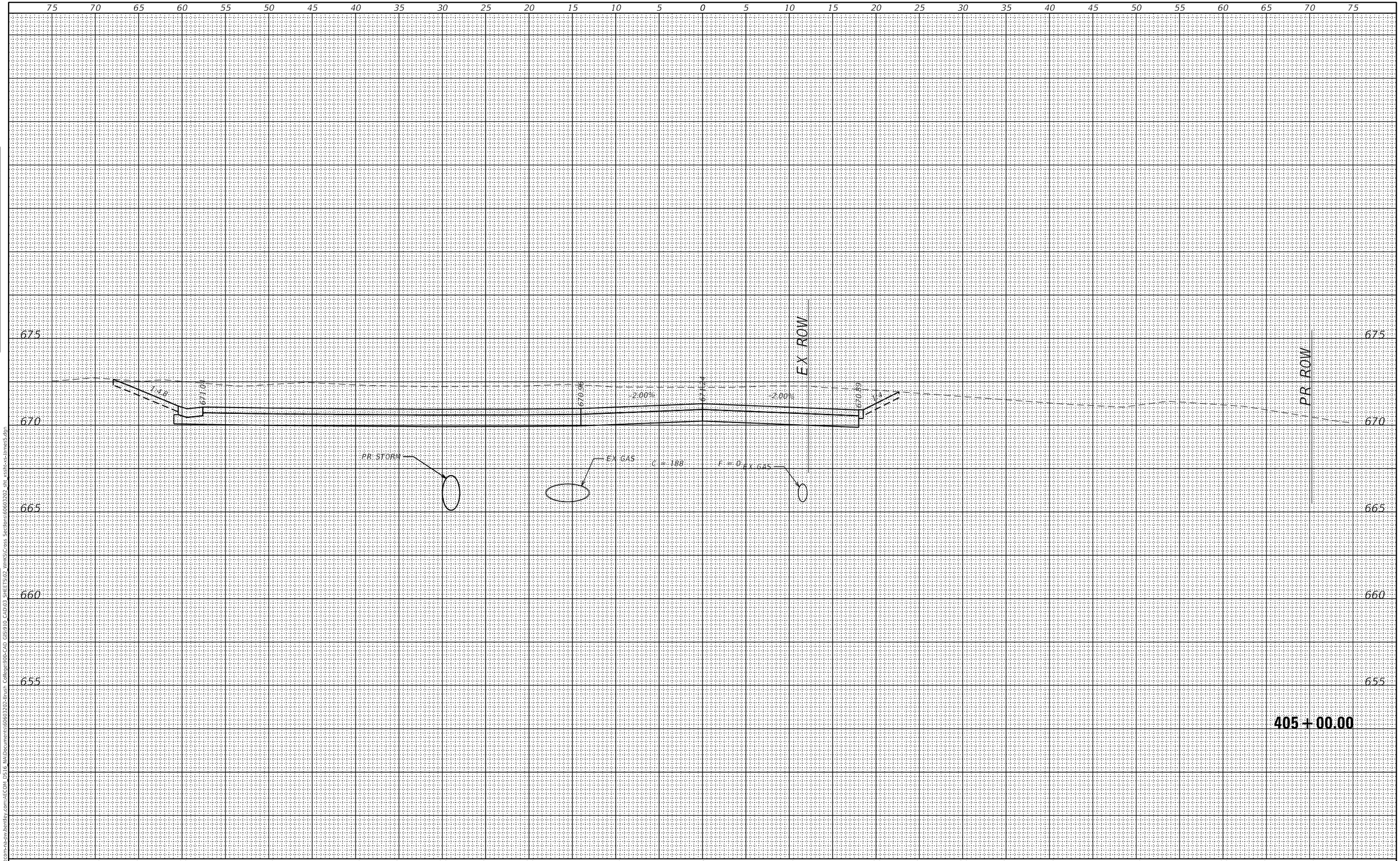

FINAL SURVEY		BY	DATE
NOTE BOOK	SURVEYED		
	PLOTTED		
	TEMPLATE		
	AREAS		
NO.	AREAS CHECKED		

ORIGINAL SURVEY		BY	DATE
NOTE BOOK	SURVEYED		
	PLOTTED		
	TEMPLATE		
	AREAS		
NO.	AREAS CHECKED		

MODEL: Default
FILE NAME: pw:\\aecom-na-pw.bentley.com:aECOM DS16 NA\Document\60603202-Brush College\900-CAD GIS\910 CADD\3 SHEETS\02 WHKS\Cross Sections\60603202 sht xssh-xs-James5.dgn

design firm no. 184001036
whks
engineers + planners + land surveyors

USER NAME = $OPERATOR$	DESIGNED - -	REVISED
	CHECKED - -	REVISED
PLOT SCALE = 10.0000 ' / in.	DRAWN - -	REVISED
PLOT DATE = 10/30/2020	CHECKED - -	REVISED

STATE OF ILLINOIS
DEPARTMENT OF TRANSPORTATION

NORTH JAMES STREET
CROSS SECTIONS

SCALE: 1" = 5' | SHEET 5 OF 23 SHEETS | STA. 405+00.00 TO STA. 405+00.00

F.A.U. RTE.	SECTION	COUNTY	TOTAL SHEETS	SHEET NO.
7448	09-00933-01-BR	MACON	996	878

CONTRACT NO. 6WGY(165)

ILLINOIS | FED. AID PROJECT

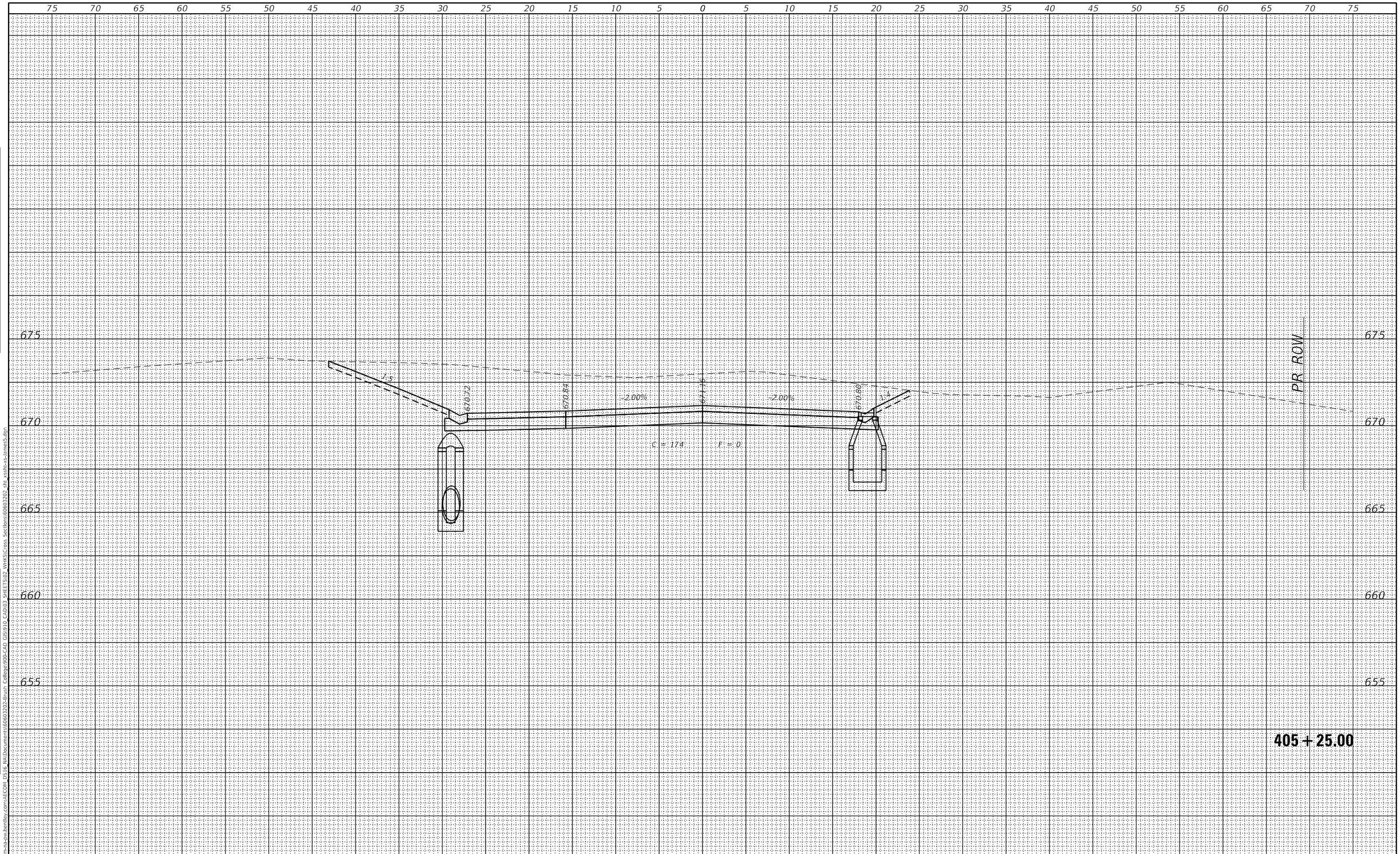

FINAL SURVEY		BY	DATE
	SURVEYED		
	PLOTTED		
NOTE BOOK	TEMPLATE		
	AREAS		
NO.	AREAS CHECKED		

ORIGINAL SURVEY		BY	DATE
	SURVEYED		
	PLOTTED		
NOTE BOOK	TEMPLATE		
	AREAS		
NO.	AREAS CHECKED		

MODEL: Default
FILE NAME: pw:\\aecom-na-sw.bentley.com:AECOM DS16 NA\Documents\60603202-Brush College90b-CAD GIS\910 CAD\03 SHEETS\02 VHKS\Cross Sections\60603202 sht xssht-xs-James5.dgn

design firm no. 184001036
whks
engineers + planners + land surveyors

USER NAME = $OPERATOR$	DESIGNED - -	REVISED
	CHECKED - -	REVISED
PLOT SCALE = 10.0000 ' / in.	DRAWN - -	REVISED
PLOT DATE = 10/30/2020	CHECKED - -	REVISED

STATE OF ILLINOIS
DEPARTMENT OF TRANSPORTATION

NORTH JAMES STREET
CROSS SECTIONS

SCALE: 1" = 5' | SHEET 6 OF 23 SHEETS | STA. 405+25.00 TO STA. 405+25.00

F.A.U. RTE.	SECTION	COUNTY	TOTAL SHEETS	SHEET NO.
7448	09-00933-01-BR	MACON	996	879

CONTRACT NO. 6WGY(165)

ILLINOIS | FED. AID PROJECT

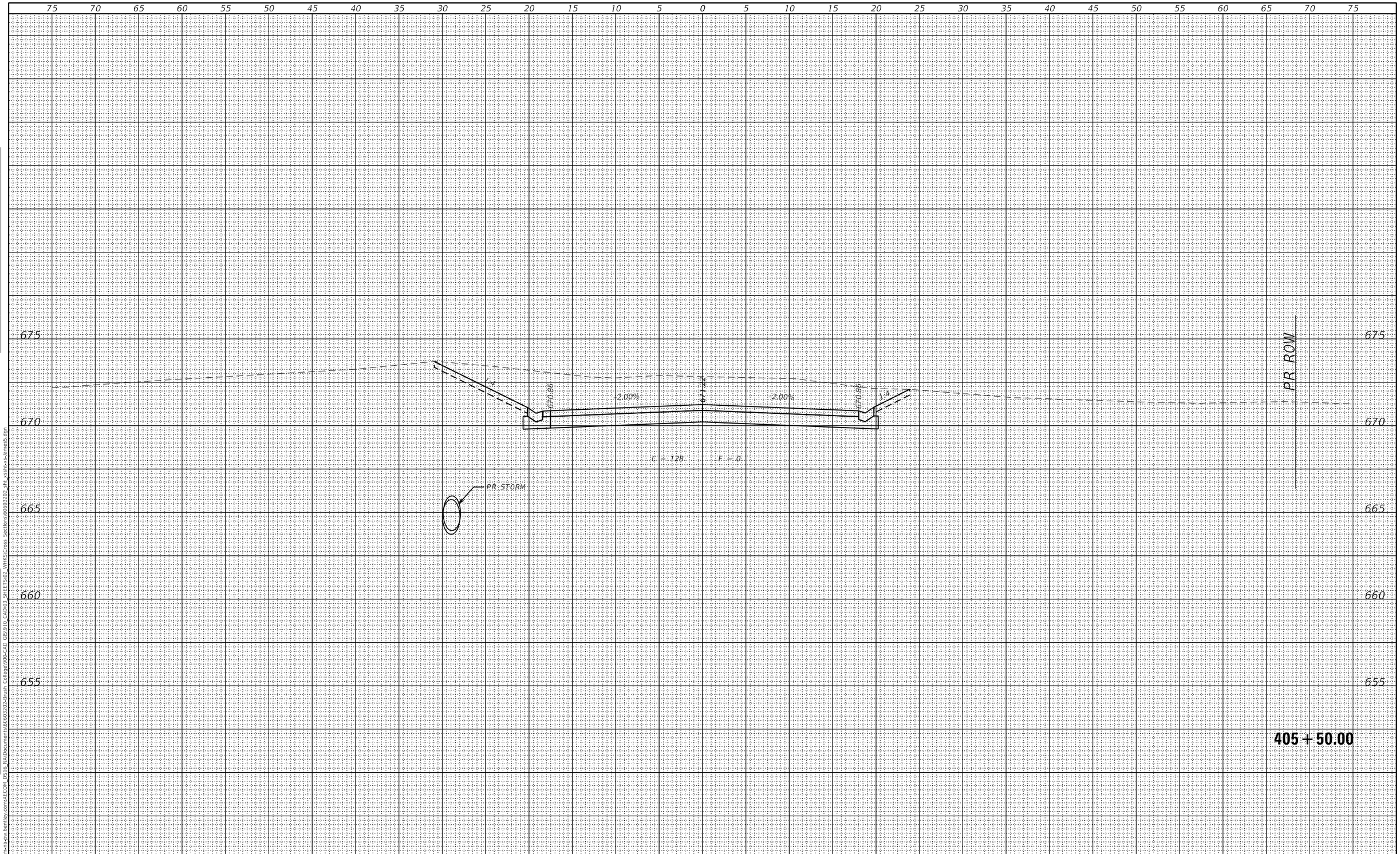

FINAL SURVEY		BY	DATE
	SURVEYED		
	PLOTTED		
NOTE BOOK	TEMPLATE		
	AREAS		
NO.	AREAS CHECKED		

ORIGINAL SURVEY		BY	DATE
	SURVEYED		
	PLOTTED		
NOTE BOOK	TEMPLATE		
	AREAS		
NO.	AREAS CHECKED		

MODEL: Default
FILE NAME: pw:\\aecom-na-pw.bentley.com:AECOM DS16 NA\Documents\60603202-Brush College90b-CAD GIS\910 CAD\03 SHEETS\02 VHKS\Cross Sections\60603202 sht xssht-xs-James5.dgn

design firm no. 184001036
whks
engineers + planners + land surveyors

USER NAME = $OPERATOR$	DESIGNED - -	REVISED
	CHECKED - -	REVISED
PLOT SCALE = 10.0000 ' / in.	DRAWN - -	REVISED
PLOT DATE = 10/30/2020	CHECKED - -	REVISED

STATE OF ILLINOIS
DEPARTMENT OF TRANSPORTATION

NORTH JAMES STREET
CROSS SECTIONS

SCALE: 1" = 5' | SHEET 7 OF 23 SHEETS | STA. 405+50.00 TO STA. 405+50.00

F.A.U. RTE.	SECTION	COUNTY	TOTAL SHEETS	SHEET NO.
7448	09-00933-01-BR	MACON	996	880

CONTRACT NO. 6WGY(165)
ILLINOIS | FED. AID PROJECT

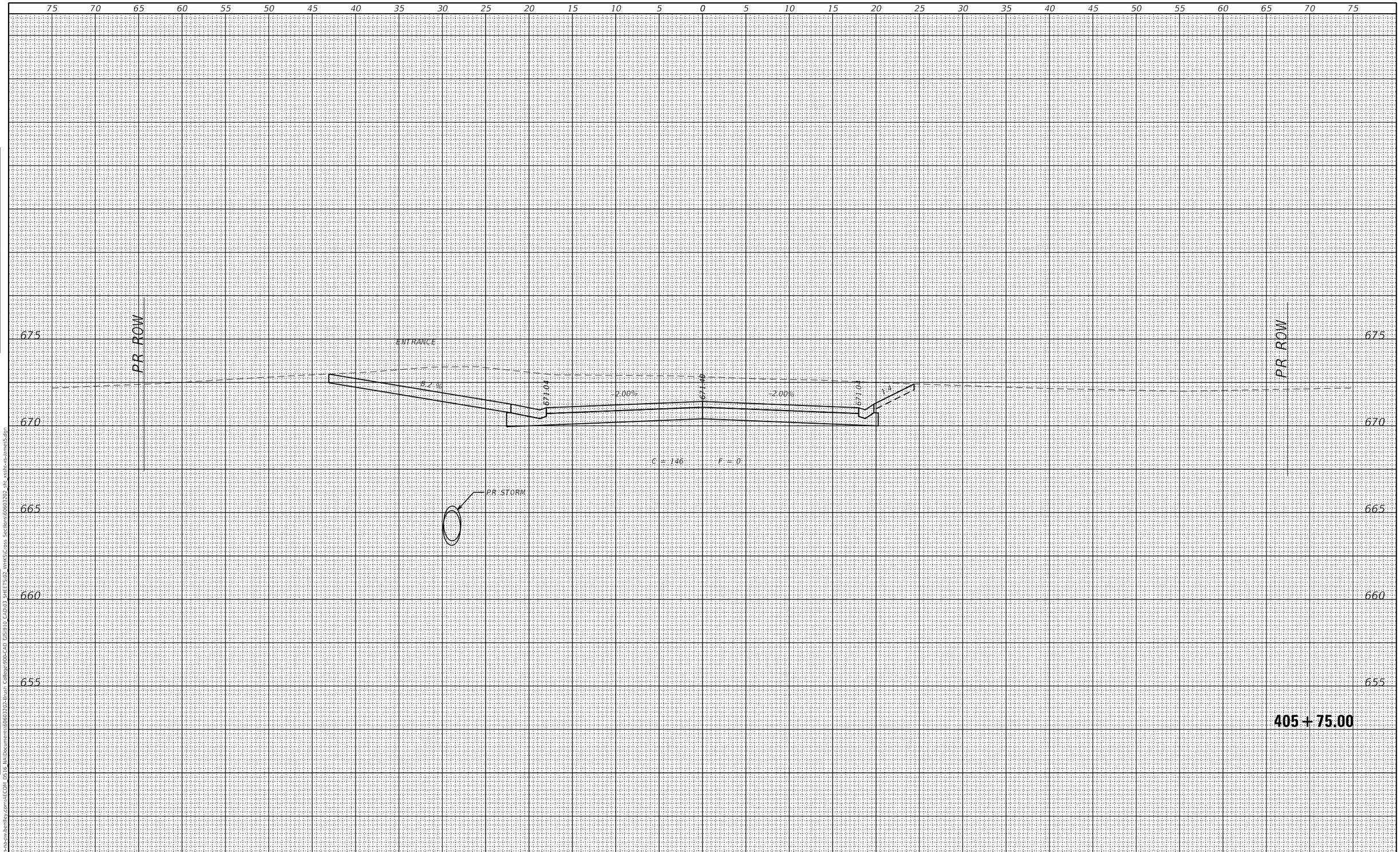

FINAL SURVEY		BY	DATE
NOTE BOOK	SURVEYED		
	PLOTTED		
	TEMPLATE		
	AREAS		
NO.	AREAS CHECKED		

ORIGINAL SURVEY		BY	DATE
NOTE BOOK	SURVEYED		
	PLOTTED		
	TEMPLATE		
	AREAS		
NO.	AREAS CHECKED		

MODEL: Default
FILE NAME: pw:\\aecom-na-sw.bentley.com:AECOM DS16 NA\Documents\60603202-Brush College90b-CAD GIS\910 CAD\03 SHEETS\02 VHKS\Cross Sections\60603202 sht xssht-xs-James5.dgn

design firm no. 184001036
whks
engineers + planners + land surveyors

USER NAME = $OPERATOR$	DESIGNED - -	REVISED	
	CHECKED - -	REVISED	
PLOT SCALE = 10.0000 ' / in.	DRAWN - -	REVISED	
PLOT DATE = 10/30/2020	CHECKED - -	REVISED	

STATE OF ILLINOIS
DEPARTMENT OF TRANSPORTATION

NORTH JAMES STREET
CROSS SECTIONS

SCALE: 1" = 5' | SHEET 8 OF 23 SHEETS | STA. 405+75.00 TO STA. 405+75.00

F.A.U. RTE.	SECTION	COUNTY	TOTAL SHEETS	SHEET NO.
7448	09-00933-01-BR	MACON	996	881

CONTRACT NO. 6WGY(165)
ILLINOIS | FED. AID PROJECT

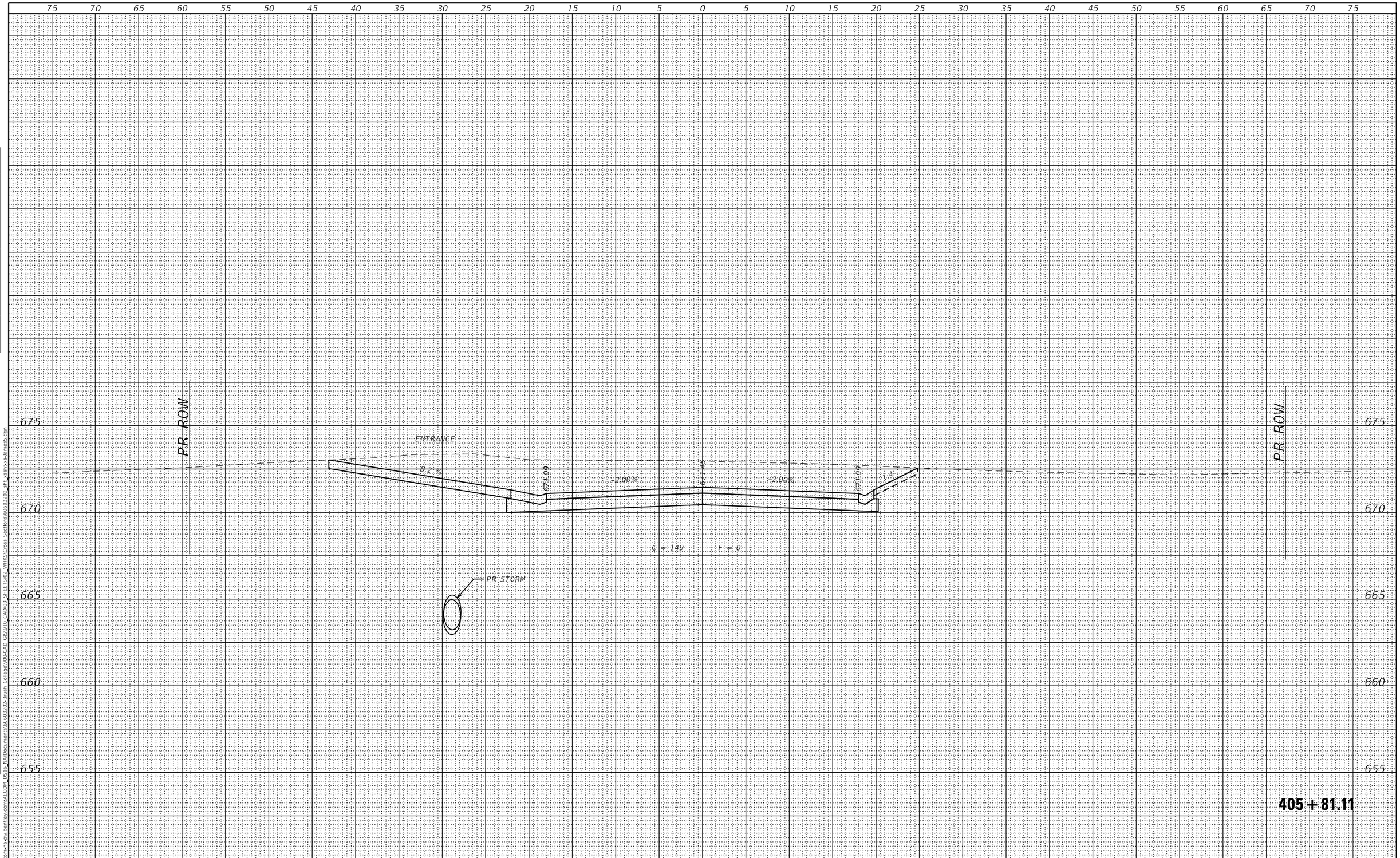

FINAL SURVEY	BY	DATE
SURVEYED		
PLOTTED		
TEMPLATE		
AREAS		
AREAS CHECKED		
NOTE BOOK		
NO.		

ORIGINAL SURVEY	BY	DATE
SURVEYED		
PLOTTED		
TEMPLATE		
AREAS		
AREAS CHECKED		
NOTE BOOK		
NO.		

MODEL: Default
FILE NAME: pw:\\aecom-na-pw.bentley.com:AECOM DS16 NA\Documents\60603202-Brush College\900-CAD GIS\910_CAD\03 SHEETS\02 WHKS\Cross Sections\60603202_sht_xsshtx-xs-James5.dgn

design firm no. 184001036
whks
engineers • planners • land surveyors

USER NAME = $OPERATOR$	DESIGNED - -	REVISED	
	CHECKED - -	REVISED	
PLOT SCALE = 10.0000 ' / in.	DRAWN - -	REVISED	
PLOT DATE = 10/30/2020	CHECKED - -	REVISED	

STATE OF ILLINOIS
DEPARTMENT OF TRANSPORTATION

NORTH JAMES STREET
CROSS SECTIONS

SCALE: 1" = 5' | SHEET 9 OF 23 SHEETS | STA. 405+81.11 TO STA. 405+81.11

F.A.U. RTE.	SECTION	COUNTY	TOTAL SHEETS	SHEET NO.
7448	09-00933-01-BR	MACON	996	882

CONTRACT NO. 6WGY(165)

ILLINOIS | FED. AID PROJECT

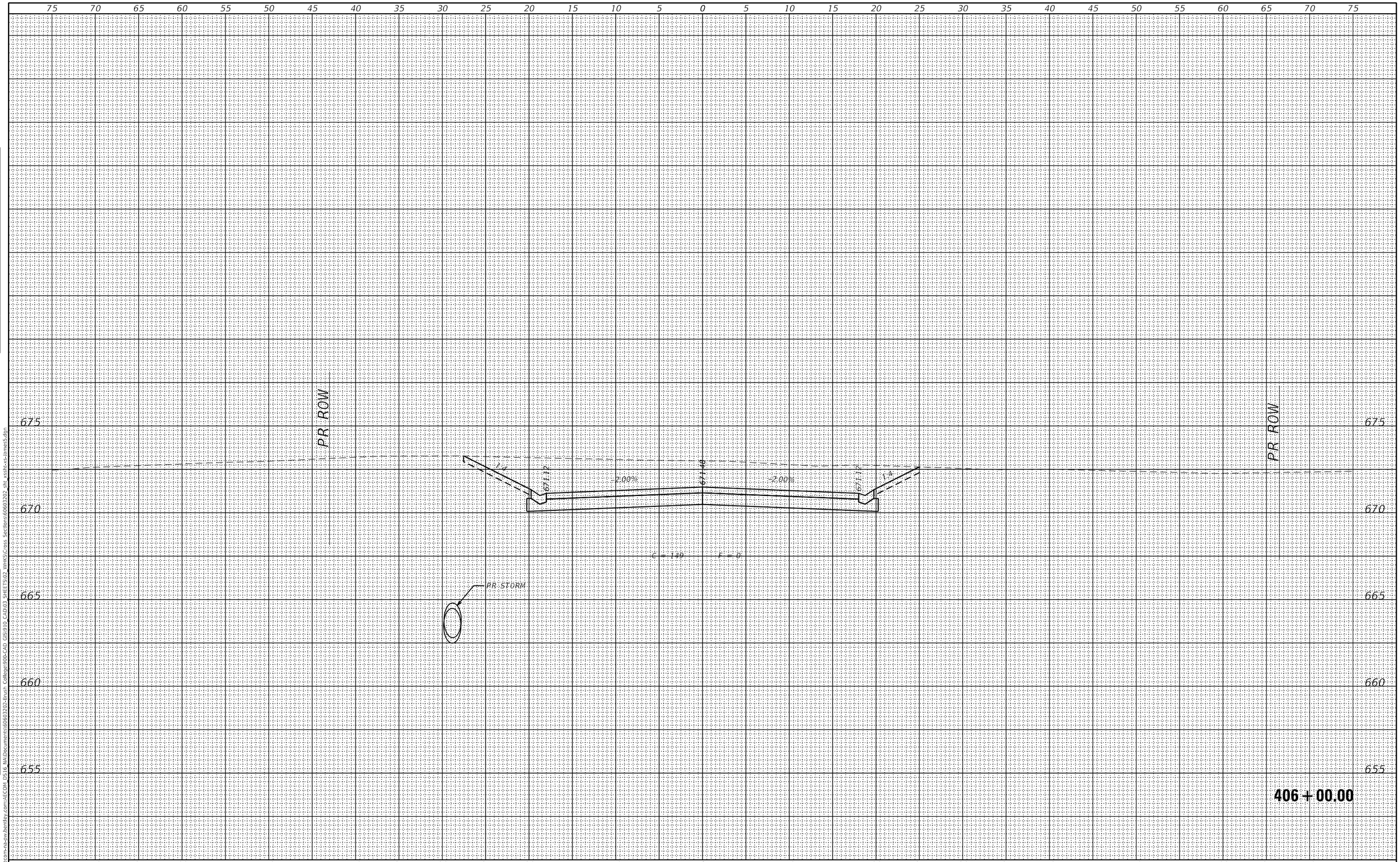

FINAL SURVEY		BY	DATE
	SURVEYED		
	PLOTTED		
NOTE BOOK	TEMPLATE		
	AREAS		
NO.	AREAS CHECKED		

ORIGINAL SURVEY		BY	DATE
	SURVEYED		
	PLOTTED		
NOTE BOOK	TEMPLATE		
	AREAS		
NO.	AREAS CHECKED		

MODEL: Default
FILE NAME: pw:\\aecom-na-pw.bentley.com:AECOM DS16 NA\Document\60603202-Brush College\900-CAD GIS\910 CAD\03 SHEETS\02 WHKS\Cross Sections\60603202 sht xssh-xs-James5.dgn

design firm no. 184001036
whks
engineers + planners + land surveyors

USER NAME = $OPERATOR$	DESIGNED - -	REVISED	
	CHECKED - -	REVISED	
PLOT SCALE = 10.0000 ' / in.	DRAWN - -	REVISED	
PLOT DATE = 10/30/2020	CHECKED - -	REVISED	

STATE OF ILLINOIS
DEPARTMENT OF TRANSPORTATION

NORTH JAMES STREET
CROSS SECTIONS

SCALE: 1" = 5' | SHEET 10 OF 23 SHEETS | STA. 406+00.00 TO STA. 406+00.00

F.A.U. RTE.	SECTION	COUNTY	TOTAL SHEETS	SHEET NO.
7448	09-00933-01-BR	MACON	996	883

CONTRACT NO. 6WGY(165)

ILLINOIS | FED. AID PROJECT

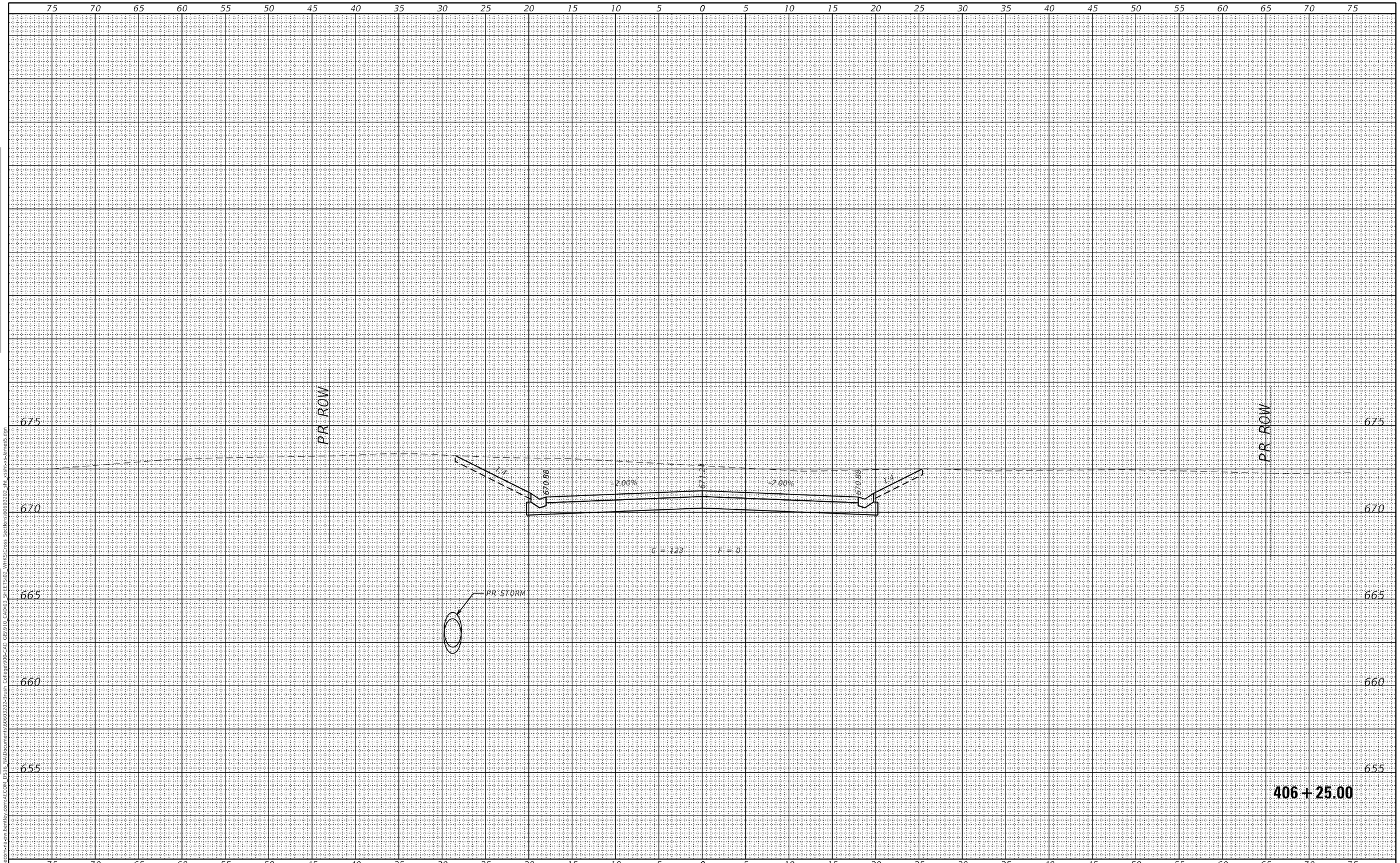

FINAL SURVEY		BY	DATE
NOTE BOOK	SURVEYED		
	PLOTTED		
	TEMPLATE		
	AREAS		
NO.	AREAS CHECKED		

ORIGINAL SURVEY		BY	DATE
NOTE BOOK	SURVEYED		
	PLOTTED		
	TEMPLATE		
	AREAS		
NO.	AREAS CHECKED		

MODEL: Default
FILE NAME: pw:\\aecom-na-pw.bentley.com:AECOM DS16 NA\Document\60603202-Brush College\900-CAD GIS\910 CAD\03 SHEETS\02 VHKS\Cross Sections\60603202 sht xssh-xs-James5.dgn

design firm no. 184001036
whks
engineers + planners + land surveyors

USER NAME = $OPERATOR$	DESIGNED - -	REVISED
	CHECKED - -	REVISED
PLOT SCALE = 10.0000 ' / in.	DRAWN - -	REVISED
PLOT DATE = 10/30/2020	CHECKED - -	REVISED

STATE OF ILLINOIS
DEPARTMENT OF TRANSPORTATION

NORTH JAMES STREET
CROSS SECTIONS

SCALE: 1" = 5' | SHEET 11 OF 23 SHEETS | STA. 406+25.00 TO STA. 406+25.00

F.A.U. RTE.	SECTION	COUNTY	TOTAL SHEETS	SHEET NO.
7448	09-00933-01-BR	MACON	996	884

CONTRACT NO. 6WGY(165)

ILLINOIS | FED. AID PROJECT

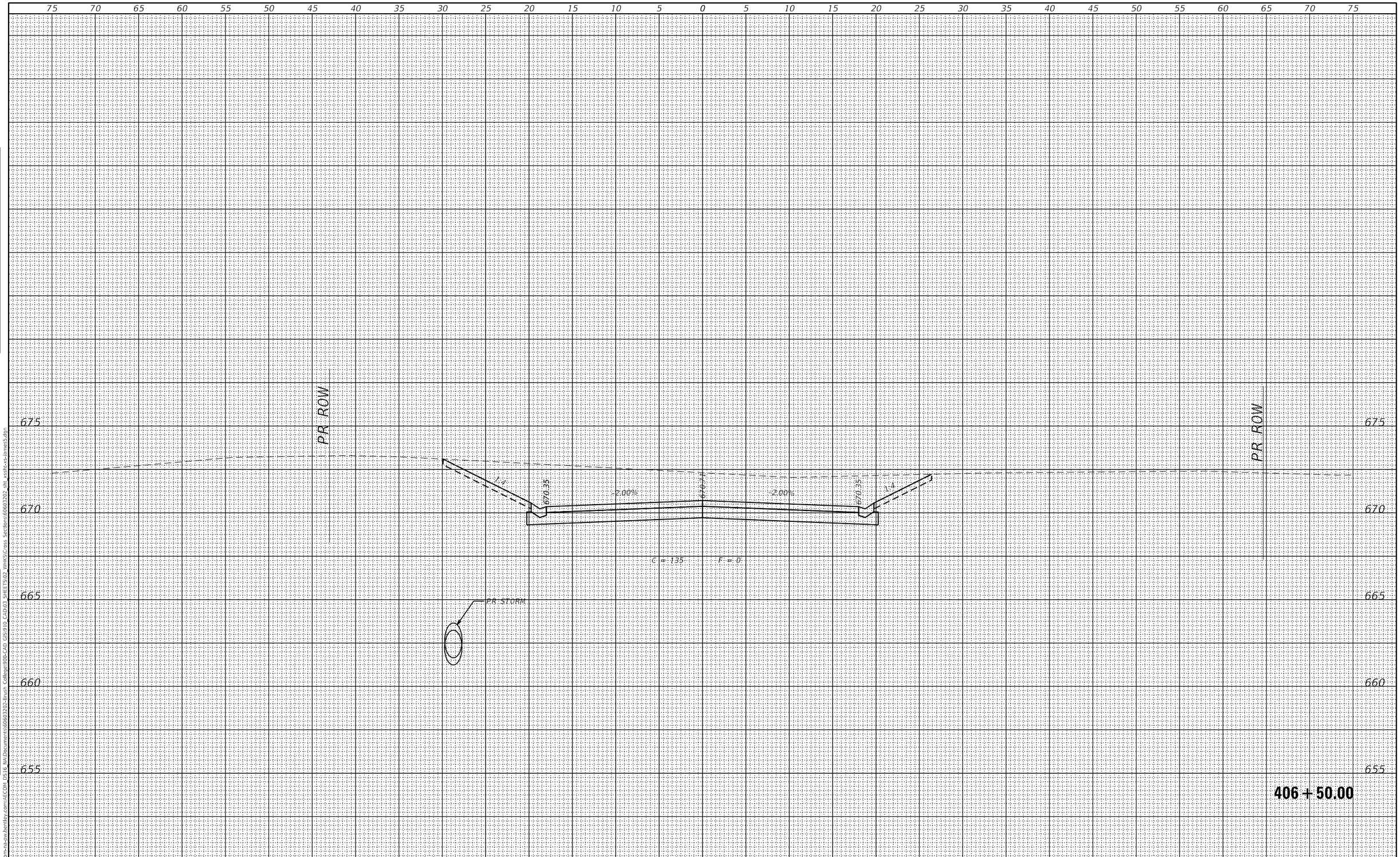

FINAL SURVEY		BY	DATE
NOTE BOOK	SURVEYED		
	PLOTTED		
	TEMPLATE		
	AREAS		
NO.	AREAS CHECKED		

ORIGINAL SURVEY		BY	DATE
NOTE BOOK	SURVEYED		
	PLOTTED		
	TEMPLATE		
	AREAS		
NO.	AREAS CHECKED		

MODEL: Default
FILE NAME: pw:\\aecom-na-pw.bentley.com:aECOM DS16 NA\Document\60603202-Brush College\900-CAD GIS\910 CADD\3 SHEETS\02 WHKS\Cross Sections\60603202 sht xssh-ns-James5.dgn

design firm no. 184001036
whks
engineers + planners + land surveyors

USER NAME = $OPERATOR$	DESIGNED - -	REVISED
	CHECKED - -	REVISED
PLOT SCALE = 10.0000 ' / in.	DRAWN - -	REVISED
PLOT DATE = 10/30/2020	CHECKED - -	REVISED

STATE OF ILLINOIS
DEPARTMENT OF TRANSPORTATION

NORTH JAMES STREET
CROSS SECTIONS

SCALE: 1" = 5' | SHEET 12 OF 23 SHEETS | STA. 406+50.00 TO STA. 406+50.00

F.A.U. RTE.	SECTION	COUNTY	TOTAL SHEETS	SHEET NO.
7448	09-00933-01-BR	MACON	996	885

CONTRACT NO. 6WGY(165)

ILLINOIS | FED. AID PROJECT

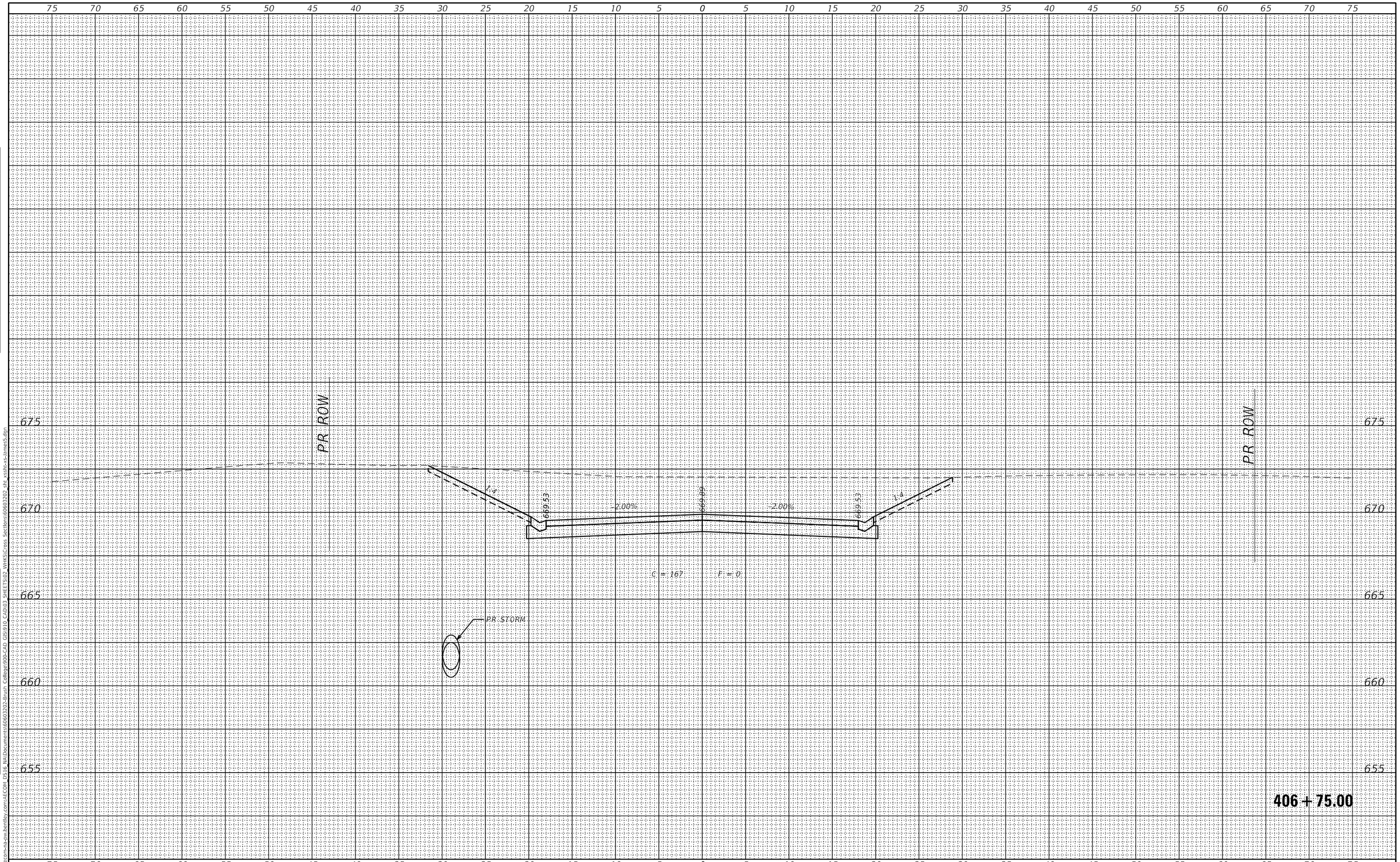

FINAL SURVEY	BY	DATE
SURVEYED		
PLOTTED		
TEMPLATE		
AREAS		
AREAS CHECKED		
NOTE BOOK NO.		

ORIGINAL SURVEY	BY	DATE
SURVEYED		
PLOTTED		
TEMPLATE		
AREAS		
AREAS CHECKED		
NOTE BOOK NO.		

MODEL: Default
FILE NAME: pw:\\aecom-na-pw.bentley.com:AECOM DS16 NA\Documents\60603202-Brush College\900-CAD GIS\910 CADD\3 SHEETS\02 WHKS\Cross Sections\60603202 sht xssh-ex-James5.dgn

design firm no. 184001036
whks
engineers + planners + land surveyors

USER NAME = $OPERATOR$	DESIGNED - -	REVISED
	CHECKED - -	REVISED
PLOT SCALE = 10.0000 ' / in.	DRAWN - -	REVISED
PLOT DATE = 10/30/2020	CHECKED - -	REVISED

STATE OF ILLINOIS
DEPARTMENT OF TRANSPORTATION

NORTH JAMES STREET
CROSS SECTIONS

SCALE: 1" = 5' | SHEET 13 OF 23 SHEETS | STA. 406+75.00 TO STA. 406+75.00

F.A.U. RTE.	SECTION	COUNTY	TOTAL SHEETS	SHEET NO.
7448	09-00933-01-BR	MACON	996	886

CONTRACT NO. 6WGY(165)

ILLINOIS | FED. AID PROJECT

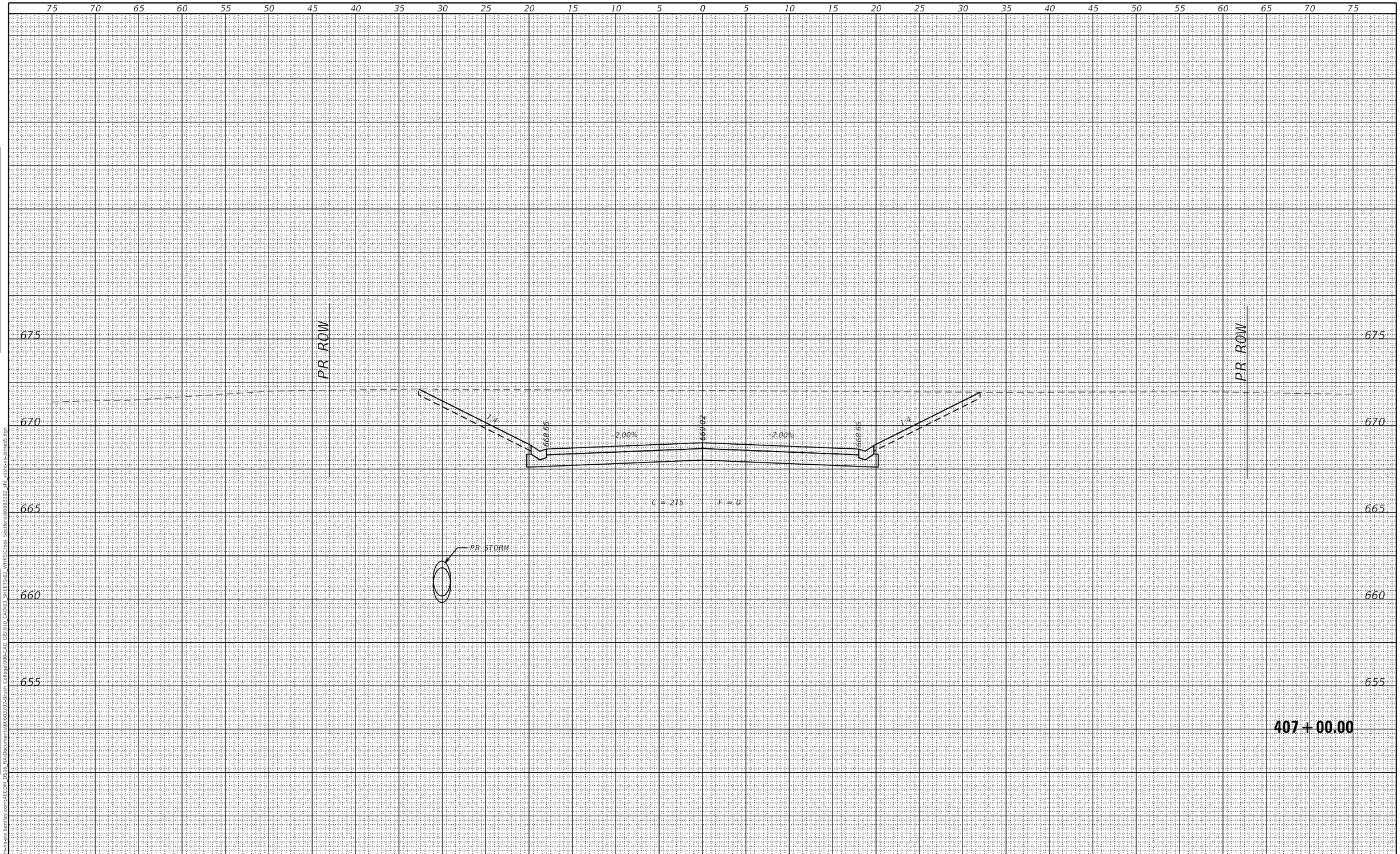

FINAL SURVEY		BY	DATE
NOTE BOOK	SURVEYED		
	PLOTTED		
	TEMPLATE		
	AREAS		
NO.	AREAS CHECKED		

ORIGINAL SURVEY		BY	DATE
NOTE BOOK	SURVEYED		
	PLOTTED		
	TEMPLATE		
	AREAS		
NO.	AREAS CHECKED		

MODEL: Default
FILE NAME: pw:\\aecom-na-sw.bentley.com:AECOM DS16 NA\Documents\60603202-Brush College90b-CAD GIS\910 CAD\03 SHEETS\02 VHKS\Cross Sections\60603202 sht xssht-xs-James5.dgn

design firm no. 184001036
whks
engineers + planners + land surveyors

USER NAME = $OPERATOR$	DESIGNED - -	REVISED
	CHECKED - -	REVISED
PLOT SCALE = 10.0000 ' / in.	DRAWN - -	REVISED
PLOT DATE = 10/30/2020	CHECKED - -	REVISED

STATE OF ILLINOIS
DEPARTMENT OF TRANSPORTATION

NORTH JAMES STREET
CROSS SECTIONS

SCALE: 1" = 5' | SHEET 14 OF 23 SHEETS | STA. 407+00.00 TO STA. 407+00.00

F.A.U. RTE.	SECTION	COUNTY	TOTAL SHEETS	SHEET NO.
7448	09-00933-01-BR	MACON	996	887

CONTRACT NO. 6WGY(165)

ILLINOIS | FED. AID PROJECT

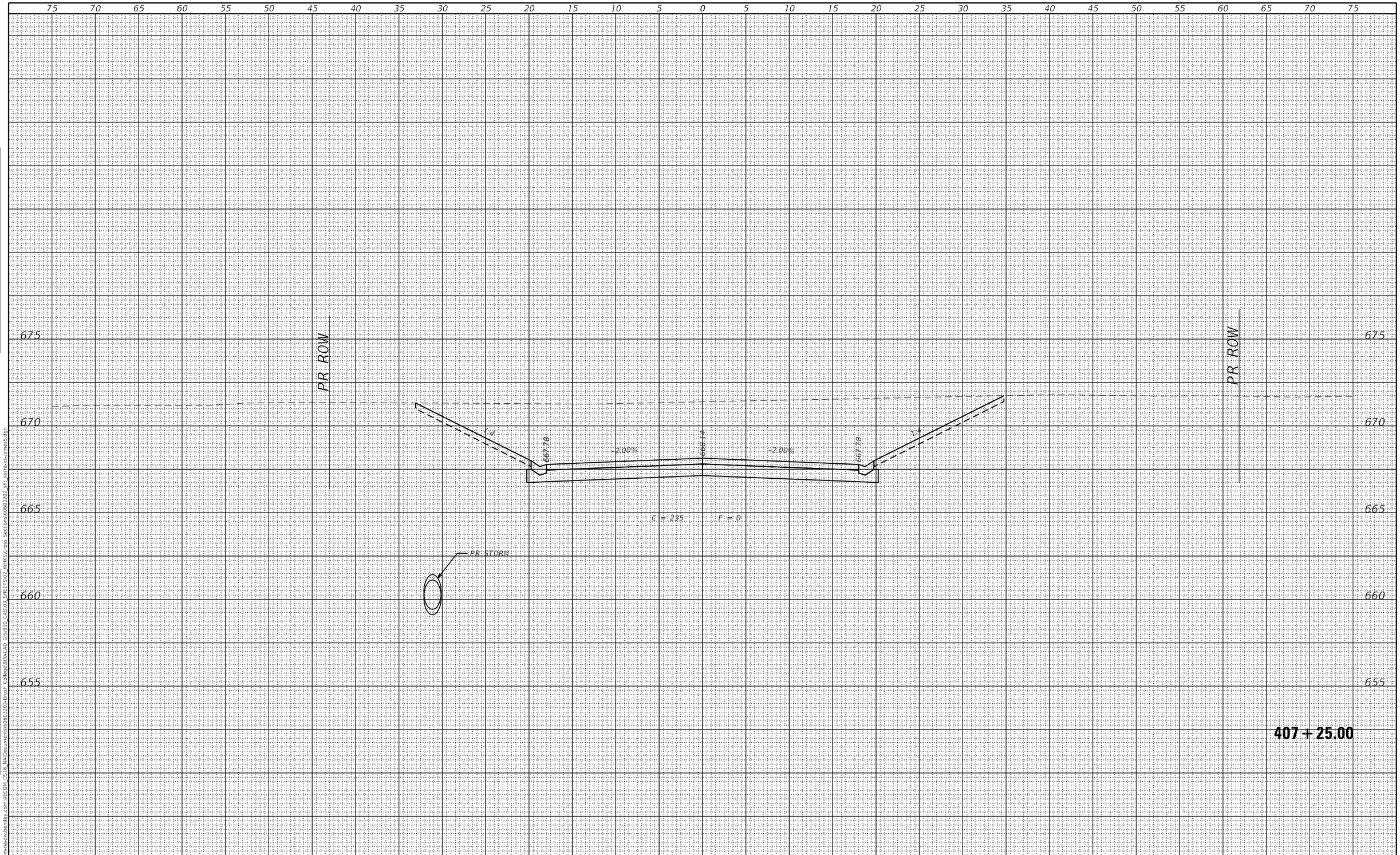

FINAL SURVEY		BY	DATE
NOTE BOOK	SURVEYED		
	PLOTTED		
	TEMPLATE		
	AREAS		
NO.	AREAS CHECKED		

ORIGINAL SURVEY		BY	DATE
NOTE BOOK	SURVEYED		
	PLOTTED		
	TEMPLATE		
	AREAS		
NO.	AREAS CHECKED		

MODEL: Default
FILE NAME: pw:\\aecom-na-pw.bentley.com:AECOM DS16 NA\Documents\60603202-Brush College\900-CAD GIS\910 CAD\03 SHEETS\02 WHKS\Cross Sections\60603202_sht_xssln-xs-James5.dgn

design firm no. 184001036
whks
engineers + planners + land surveyors

USER NAME = $OPERATOR$	DESIGNED - -	REVISED	
	CHECKED - -	REVISED	
PLOT SCALE = 10.0000 ' / in.	DRAWN - -	REVISED	
PLOT DATE = 10/30/2020	CHECKED - -	REVISED	

STATE OF ILLINOIS
DEPARTMENT OF TRANSPORTATION

NORTH JAMES STREET
CROSS SECTIONS

SCALE: 1" = 5' | SHEET 15 OF 23 SHEETS | STA. 407+25.00 TO STA. 407+25.00

F.A.U. RTE.	SECTION	COUNTY	TOTAL SHEETS	SHEET NO.
7448	09-00933-01-BR	MACON	996	888

CONTRACT NO. 6WGY(165)
ILLINOIS | FED. AID PROJECT

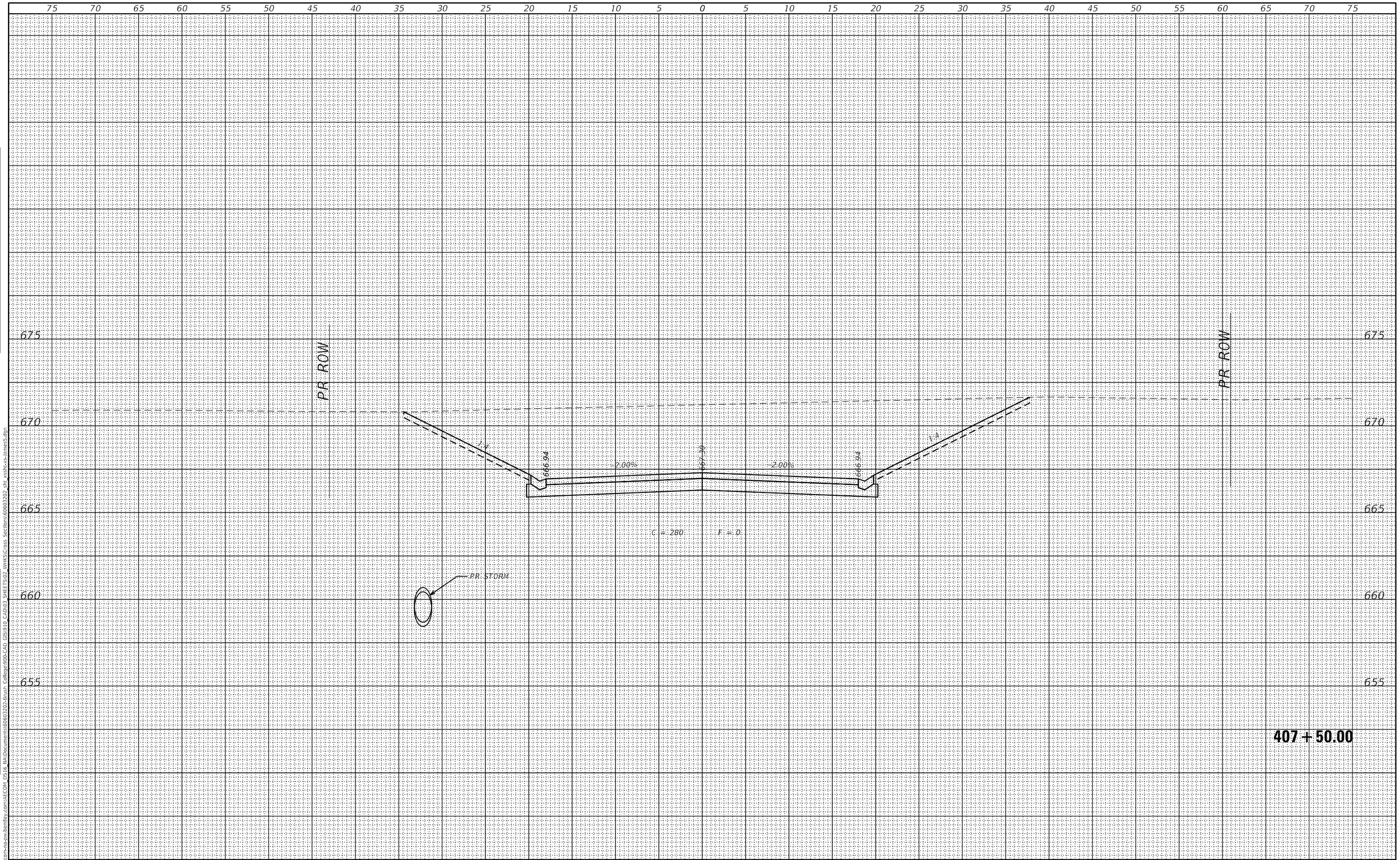

FINAL SURVEY		BY	DATE
NOTE BOOK	SURVEYED		
	PLOTTED		
	TEMPLATE		
	AREAS		
NO.	AREAS CHECKED		

ORIGINAL SURVEY		BY	DATE
NOTE BOOK	SURVEYED		
	PLOTTED		
	TEMPLATE		
	AREAS		
NO.	AREAS CHECKED		

NODEL: Default
FILE NAME: pw:\\aecom-na-pw.bentley.com:AECOM_DS16_NA\Documents\60603202-Brush College\900-CAD GIS\910 CAD\03 SHEETS\02 VHKS\Cross Sections\60603202 sht xsdh-xs-James5.dgn

design firm no. 184001036
whks
engineers + planners + land surveyors

USER NAME = $OPERATOR$	DESIGNED - -	REVISED	
	CHECKED - -	REVISED	
PLOT SCALE = 10.0000 ' / in.	DRAWN - -	REVISED	
PLOT DATE = 10/30/2020	CHECKED - -	REVISED	

STATE OF ILLINOIS
DEPARTMENT OF TRANSPORTATION

NORTH JAMES STREET
CROSS SECTIONS

SCALE: 1" = 5' | SHEET 16 OF 23 SHEETS | STA. 407+50.00 TO STA. 407+50.00

F.A.U. RTE.	SECTION	COUNTY	TOTAL SHEETS	SHEET NO.
7448	09-00933-01-BR	MACON	996	889

CONTRACT NO. 6WGY(165)

ILLINOIS | FED. AID PROJECT

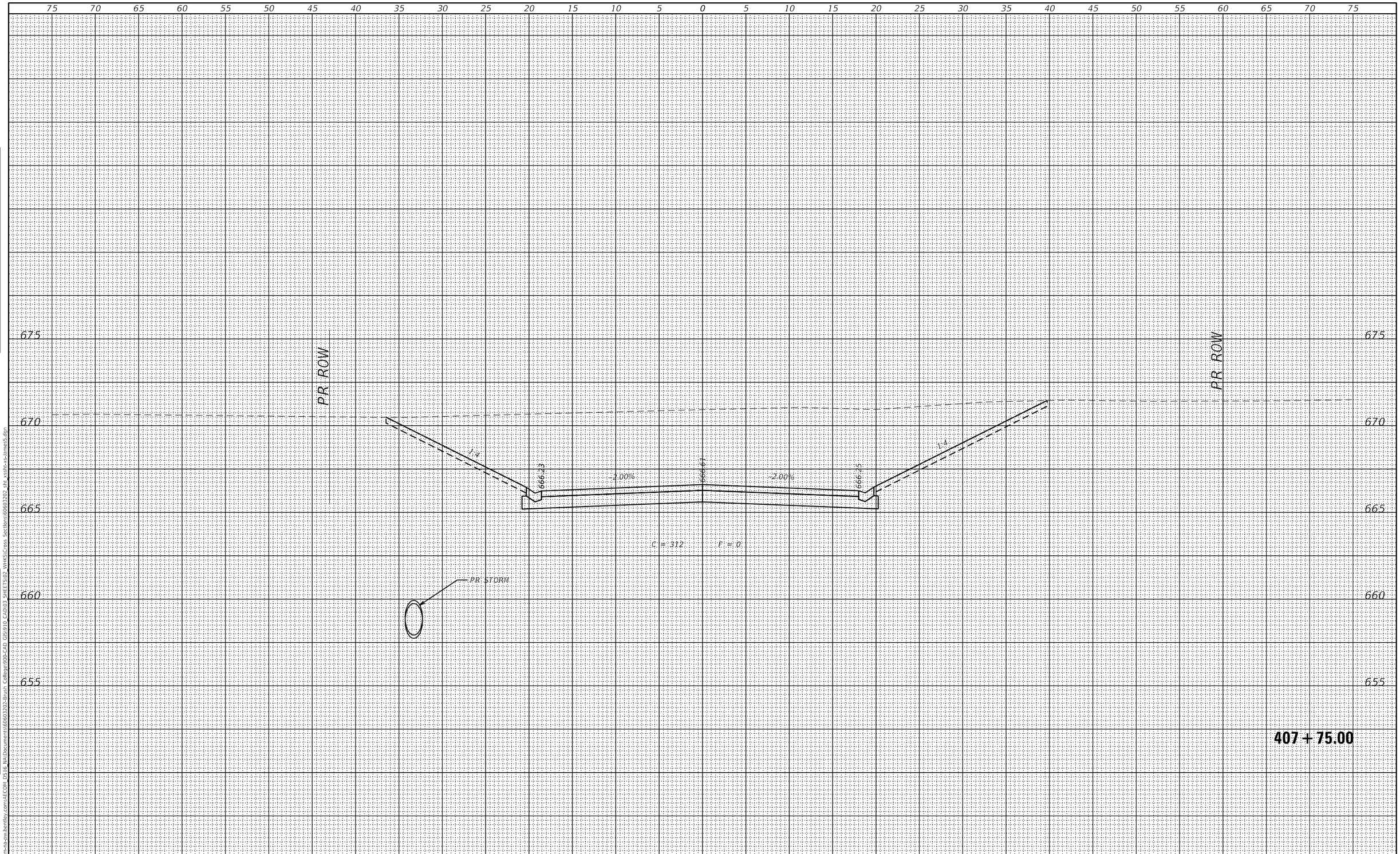

FINAL SURVEY		BY	DATE
NOTE BOOK	SURVEYED		
	PLOTTED		
	TEMPLATE		
	AREAS		
NO.	AREAS CHECKED		

ORIGINAL SURVEY		BY	DATE
NOTE BOOK	SURVEYED		
	PLOTTED		
	TEMPLATE		
	AREAS		
NO.	AREAS CHECKED		

MODEL: Default
FILE NAME: pw:\\aecom-na-pw.bentley.com:AECOM DS16 NA\Documents\60603202-Brush College90b-CAD GIS\910 CAD\03 SHEETS\02 VHKS\Cross Sections\60603202 sht xssh-ks-James5.dgn

design firm no. 184001036
whks
engineers + planners + land surveyors

USER NAME = $OPERATOR$	DESIGNED - -	REVISED
	CHECKED - -	REVISED
PLOT SCALE = 10.0000 ' / in.	DRAWN - -	REVISED
PLOT DATE = 10/30/2020	CHECKED - -	REVISED

STATE OF ILLINOIS
DEPARTMENT OF TRANSPORTATION

NORTH JAMES STREET
CROSS SECTIONS

SCALE: 1" = 5' | SHEET 17 OF 23 SHEETS | STA. 407+75.00 TO STA. 407+75.00

F.A.U. RTE.	SECTION	COUNTY	TOTAL SHEETS	SHEET NO.
7448	09-00933-01-BR	MACON	996	890

CONTRACT NO. 6WGY(165)
ILLINOIS | FED. AID PROJECT

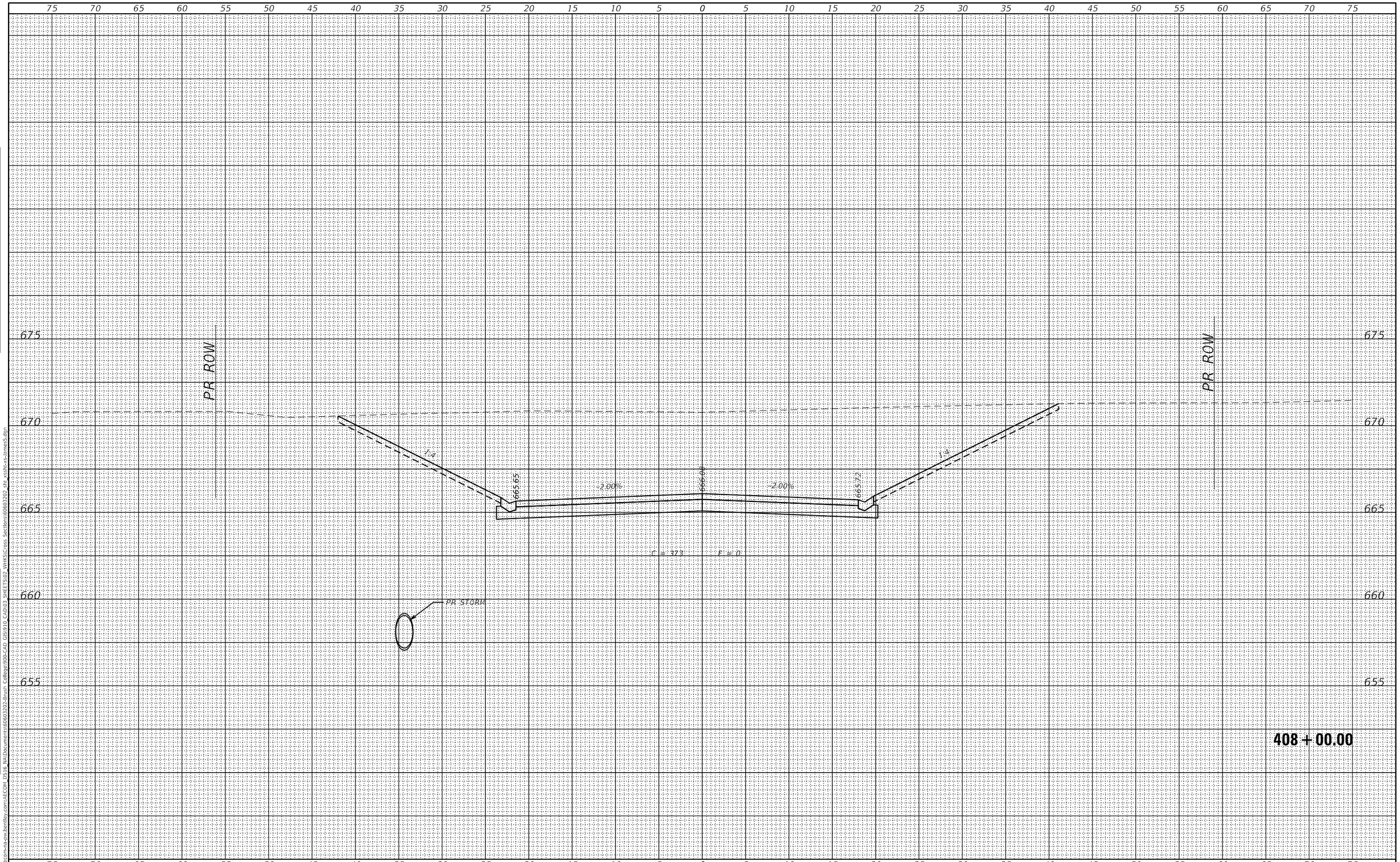

FINAL SURVEY		BY	DATE
NOTE BOOK	SURVEYED		
	PLOTTED		
	TEMPLATE		
	AREAS		
NO.	AREAS CHECKED		

ORIGINAL SURVEY		BY	DATE
NOTE BOOK	SURVEYED		
	PLOTTED		
	TEMPLATE		
	AREAS		
NO.	AREAS CHECKED		

MODEL: Default
FILE NAME: pw:\\aecom-na-pw.bentley.com:AECOM DS16 NA\Documents\60603202-Brush College90b-CAD GIS\910 CAD\03 SHEETS\02 VHKS\Cross Sections\60603202 sht xssht-xs-James5.dgn

design firm no. 184001036
whks
engineers + planners + land surveyors

USER NAME = $OPERATOR$	DESIGNED - -	REVISED	
	CHECKED - -	REVISED	
PLOT SCALE = 10,0000 ' / in.	DRAWN - -	REVISED	
PLOT DATE = 10/30/2020	CHECKED - -	REVISED	

STATE OF ILLINOIS
DEPARTMENT OF TRANSPORTATION

NORTH JAMES STREET
CROSS SECTIONS

SCALE: 1" = 5' | SHEET 18 OF 23 SHEETS | STA. 408+00.00 TO STA. 408+00.00

F.A.U. RTE.	SECTION	COUNTY	TOTAL SHEETS	SHEET NO.
7448	09-00933-01-BR	MACON	996	891

CONTRACT NO. 6WGY(165)

ILLINOIS | FED. AID PROJECT

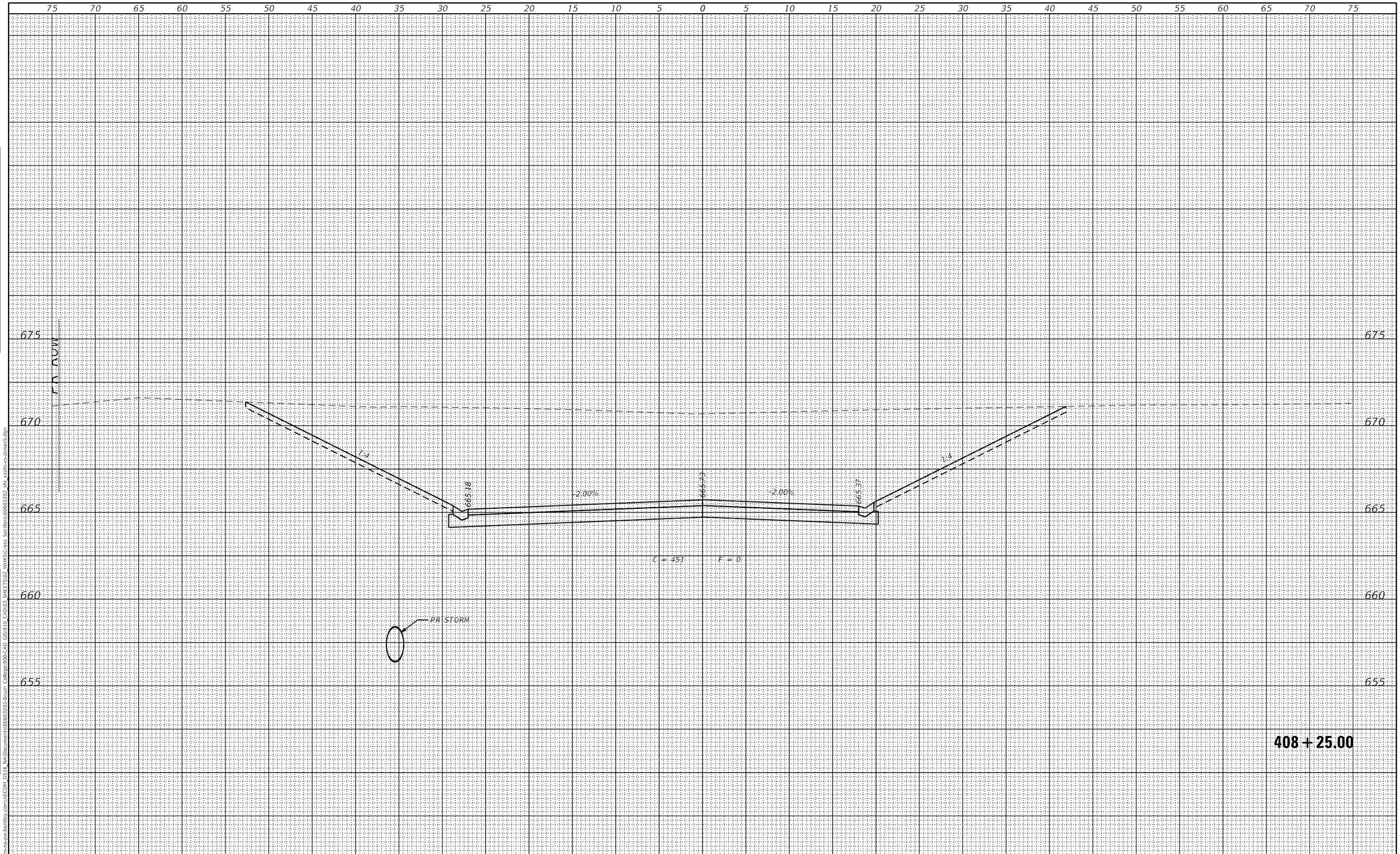

FINAL SURVEY		BY	DATE
NOTE BOOK	SURVEYED		
	PLOTTED		
	TEMPLATE		
	AREAS		
	AREAS CHECKED		
NO.			

ORIGINAL SURVEY		BY	DATE
NOTE BOOK	SURVEYED		
	PLOTTED		
	TEMPLATE		
	AREAS		
	AREAS CHECKED		
NO.			

MODEL: Default
FILE NAME: pw:\\aecom-na-pw.bentley.com:AECOM DS16 NA\Documents\60603202-Brush College90b-CAD GIS\910 CAD\03 SHEETS\02 VHKS\Cross Sections\60603202 sht xssht-xs-James5.dgn

design firm no. 184001036
whks
engineers + planners + land surveyors

USER NAME = $OPERATOR$	DESIGNED - -	REVISED
	CHECKED - -	REVISED
PLOT SCALE = 10,0000 ' / in.	DRAWN - -	REVISED
PLOT DATE = 10/30/2020	CHECKED - -	REVISED

STATE OF ILLINOIS
DEPARTMENT OF TRANSPORTATION

NORTH JAMES STREET
CROSS SECTIONS

SCALE: 1" = 5' | SHEET 19 OF 23 SHEETS | STA. 408+25.00 TO STA. 408+25.00

F.A.U. RTE.	SECTION	COUNTY	TOTAL SHEETS	SHEET NO.
7448	09-00933-01-BR	MACON	996	892

CONTRACT NO. 6WGY(165)

ILLINOIS | FED. AID PROJECT

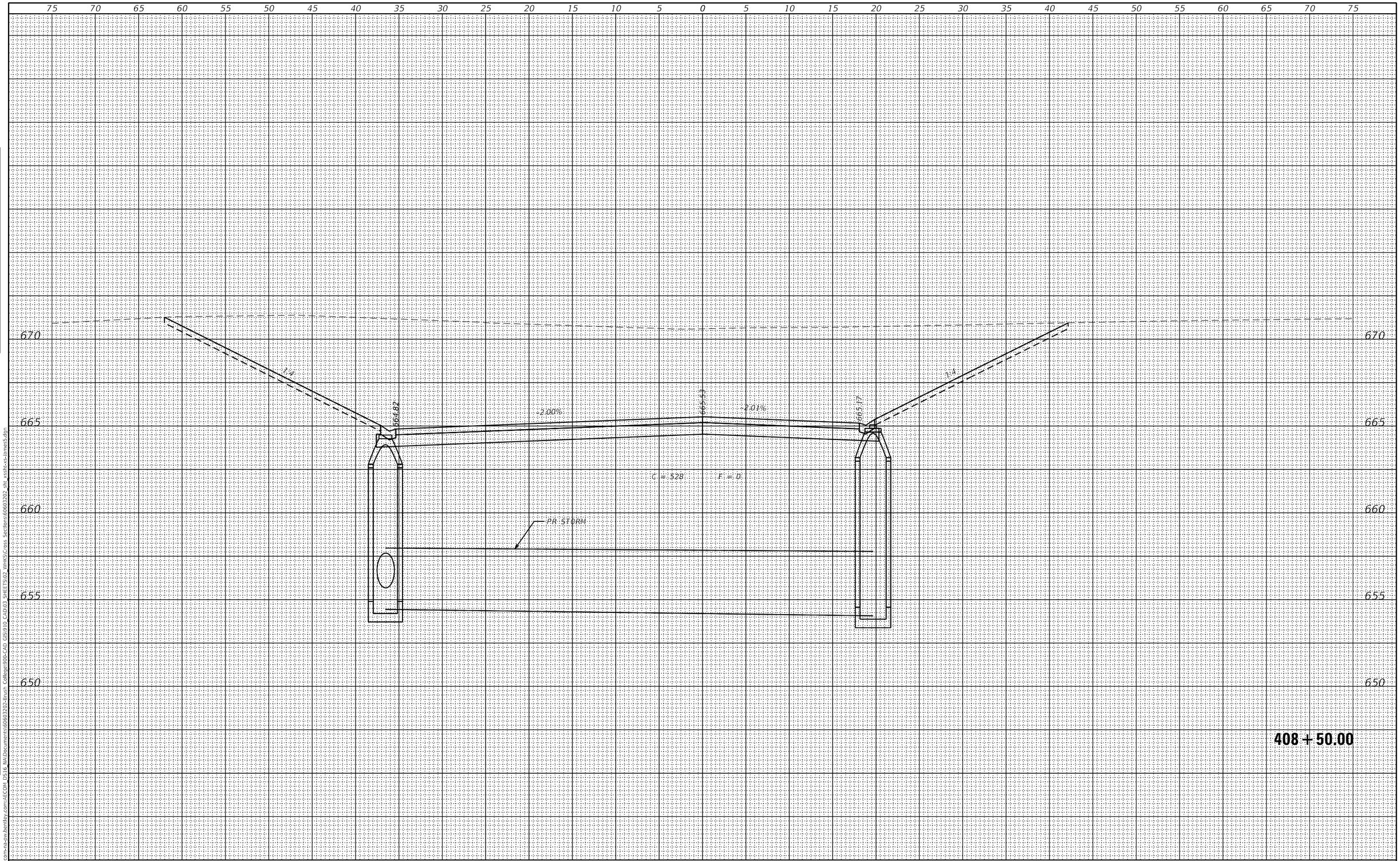

FINAL SURVEY	BY	DATE
SURVEYED		
PLOTTED		
TEMPLATE		
AREAS		
AREAS CHECKED		
NOTE BOOK		
NO.		

ORIGINAL SURVEY	BY	DATE
SURVEYED		
PLOTTED		
TEMPLATE		
AREAS		
AREAS CHECKED		
NOTE BOOK		
NO.		

MODEL: Default
FILE NAME: pw:\\aecom-na-pw.bentley.com:AECOM DS16 NA\Documents\60603202-Brush College\900-CAD GIS\910_CAD\03 SHEETS\02 WHKS\Cross Sections\60603202_sht_xssht-xs-James5.dgn

design firm no. 184001036
whks
engineers + planners + land surveyors

USER NAME = $OPERATOR$	DESIGNED - -	REVISED	
	CHECKED - -	REVISED	
PLOT SCALE = 10.0000 ' / in.	DRAWN - -	REVISED	
PLOT DATE = 10/30/2020	CHECKED - -	REVISED	

STATE OF ILLINOIS
DEPARTMENT OF TRANSPORTATION

NORTH JAMES STREET
CROSS SECTIONS

SCALE: 1" = 5' | SHEET 20 OF 23 SHEETS | STA. 408+50.00 TO STA. 408+50.00

F.A.U. RTE.	SECTION	COUNTY	TOTAL SHEETS	SHEET NO.
7448	09-00933-01-BR	MACON	996	893

CONTRACT NO. 6WGY(165)

ILLINOIS | FED. AID PROJECT

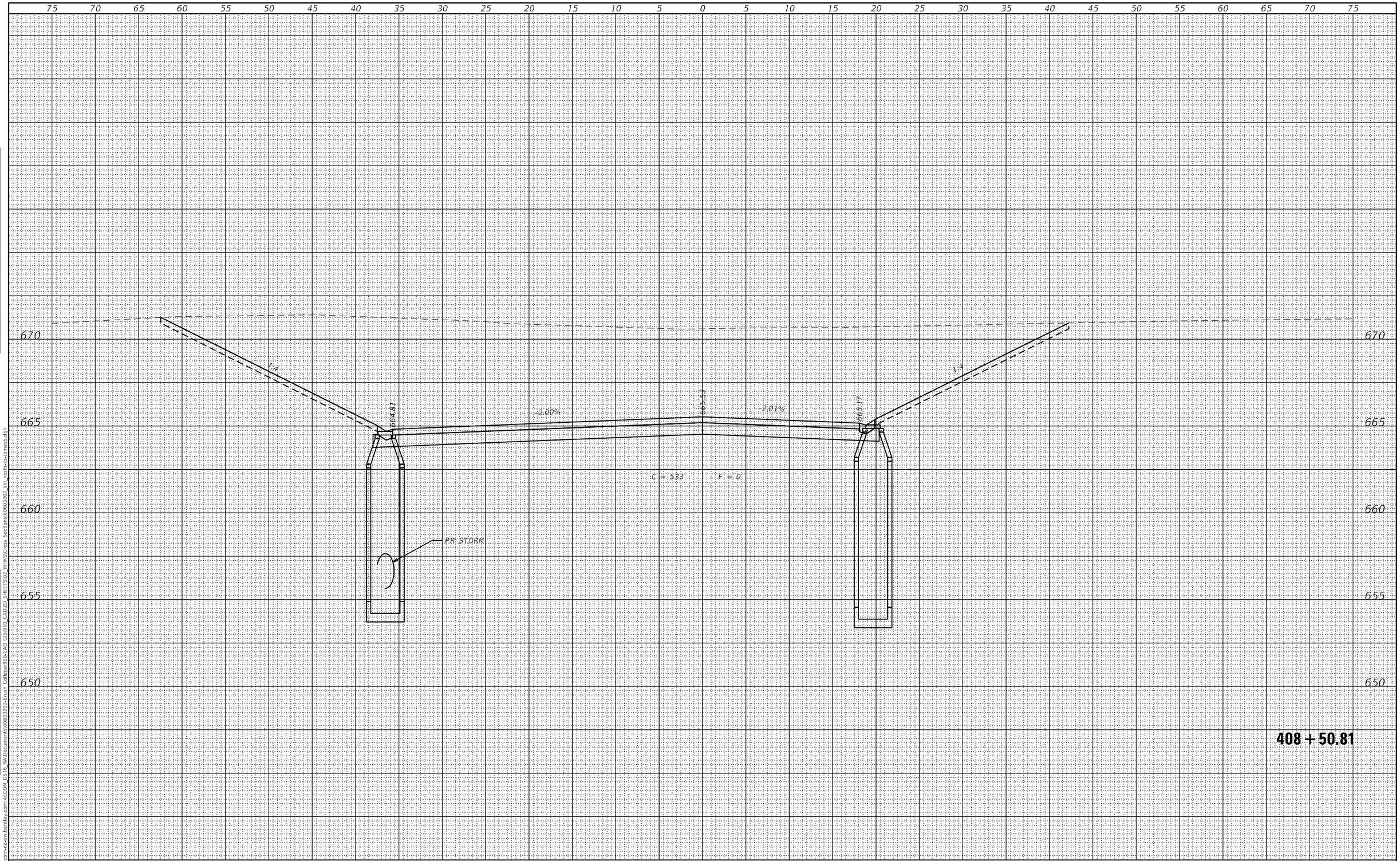

FINAL SURVEY	BY	DATE
SURVEYED		
PLOTTED		
TEMPLATE		
AREAS		
AREAS CHECKED		
NOTE BOOK		
NO.		

ORIGINAL SURVEY	BY	DATE
SURVEYED		
PLOTTED		
TEMPLATE		
AREAS		
AREAS CHECKED		
NOTE BOOK		
NO.		

MODEL: Default
FILE NAME: pw:\\aecom-na-pw.bentley.com:AECOM DS16 NA\Documents\60603202-Brush College\900-CAD GIS\910_CAD\03 SHEETS\02 WHKS\Cross Sections\60603202_sht_xssht-xs-James5.dgn

design firm no. 184001036
whks
engineers + planners + land surveyors

USER NAME = $OPERATOR$	DESIGNED - -	REVISED	
	CHECKED - -	REVISED	
PLOT SCALE = 10.0000 ' / in.	DRAWN - -	REVISED	
PLOT DATE = 10/30/2020	CHECKED - -	REVISED	

STATE OF ILLINOIS
DEPARTMENT OF TRANSPORTATION

NORTH JAMES STREET
CROSS SECTIONS

SCALE: 1" = 5' | SHEET 21 OF 23 SHEETS | STA. 408+50.81 TO STA. 408+50.81

F.A.U. RTE.	SECTION	COUNTY	TOTAL SHEETS	SHEET NO.
7448	09-00933-01-BR	MACON	996	894

CONTRACT NO. 6WGY(165)

ILLINOIS | FED. AID PROJECT

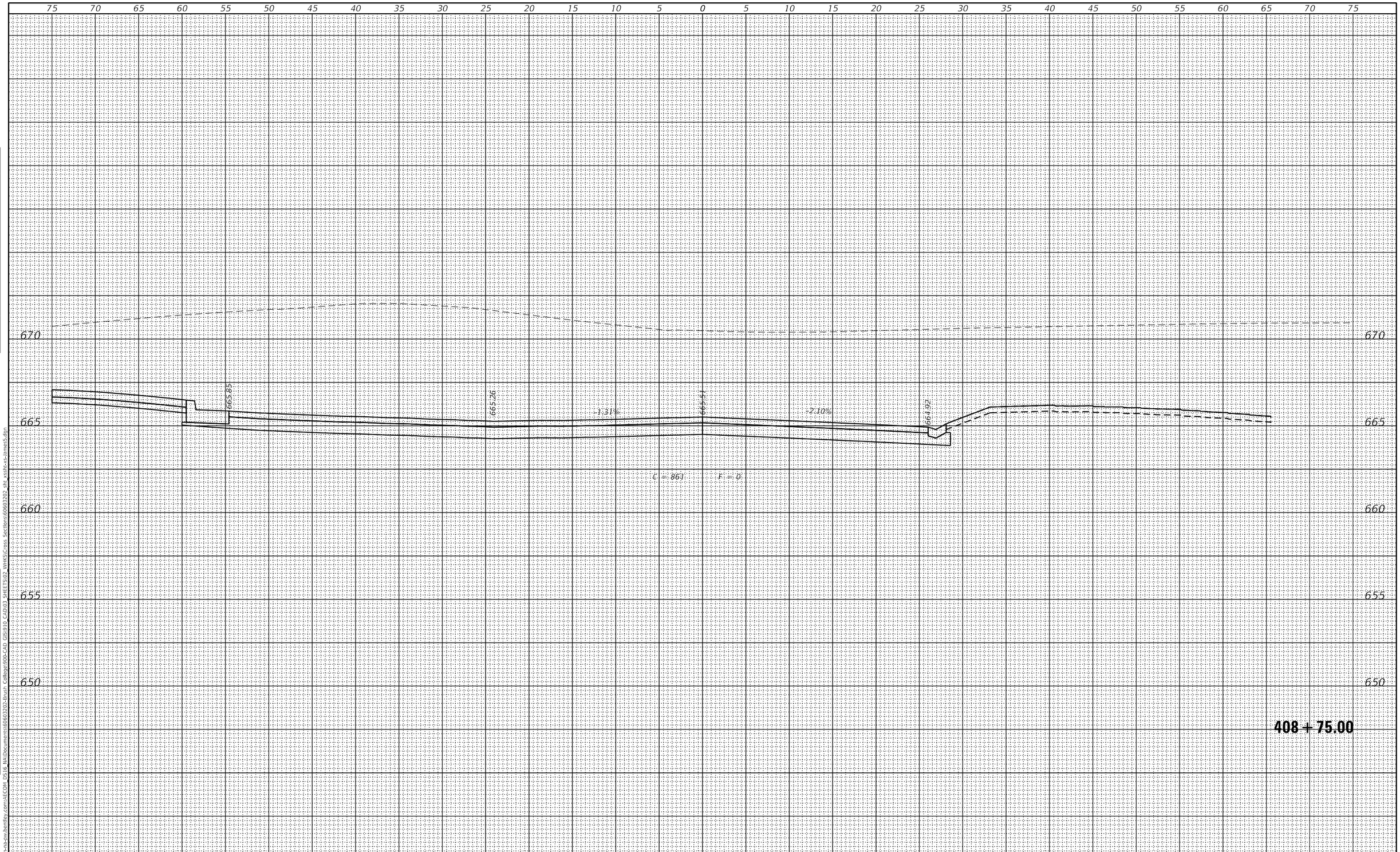

FINAL SURVEY	BY	DATE
SURVEYED		
PLOTTED		
TEMPLATE		
AREAS		
AREAS CHECKED		

ORIGINAL SURVEY	BY	DATE
SURVEYED		
PLOTTED		
TEMPLATE		
AREAS		
AREAS CHECKED		

NOTE BOOK
NO.
PAGE

MODEL: Default
FILE NAME: pw:\\aecom-na-sw.bentley.com:AECOM DS16 NA\Documents\60603202-Brush College90b-CAD GIS\910 CAD\03 SHEETS\02 VHKS\Cross Sections\60603202_sht_xssht-xs-James5.dgn

design firm no. 184001036
whks
engineers + planners + land surveyors

USER NAME = $OPERATOR$	DESIGNED - -	REVISED
	CHECKED - -	REVISED
PLOT SCALE = 10.0000 ' / in.	DRAWN - -	REVISED
PLOT DATE = 10/30/2020	CHECKED - -	REVISED

STATE OF ILLINOIS
DEPARTMENT OF TRANSPORTATION

NORTH JAMES STREET
CROSS SECTIONS

SCALE: 1" = 5' | SHEET 22 OF 23 SHEETS | STA. 408+75.00 TO STA. 408+75.00

F.A.U. RTE.	SECTION	COUNTY	TOTAL SHEETS	SHEET NO.
7448	09-00933-01-BR	MACON	996	895

CONTRACT NO. 6WGY(165)

ILLINOIS | FED. AID PROJECT

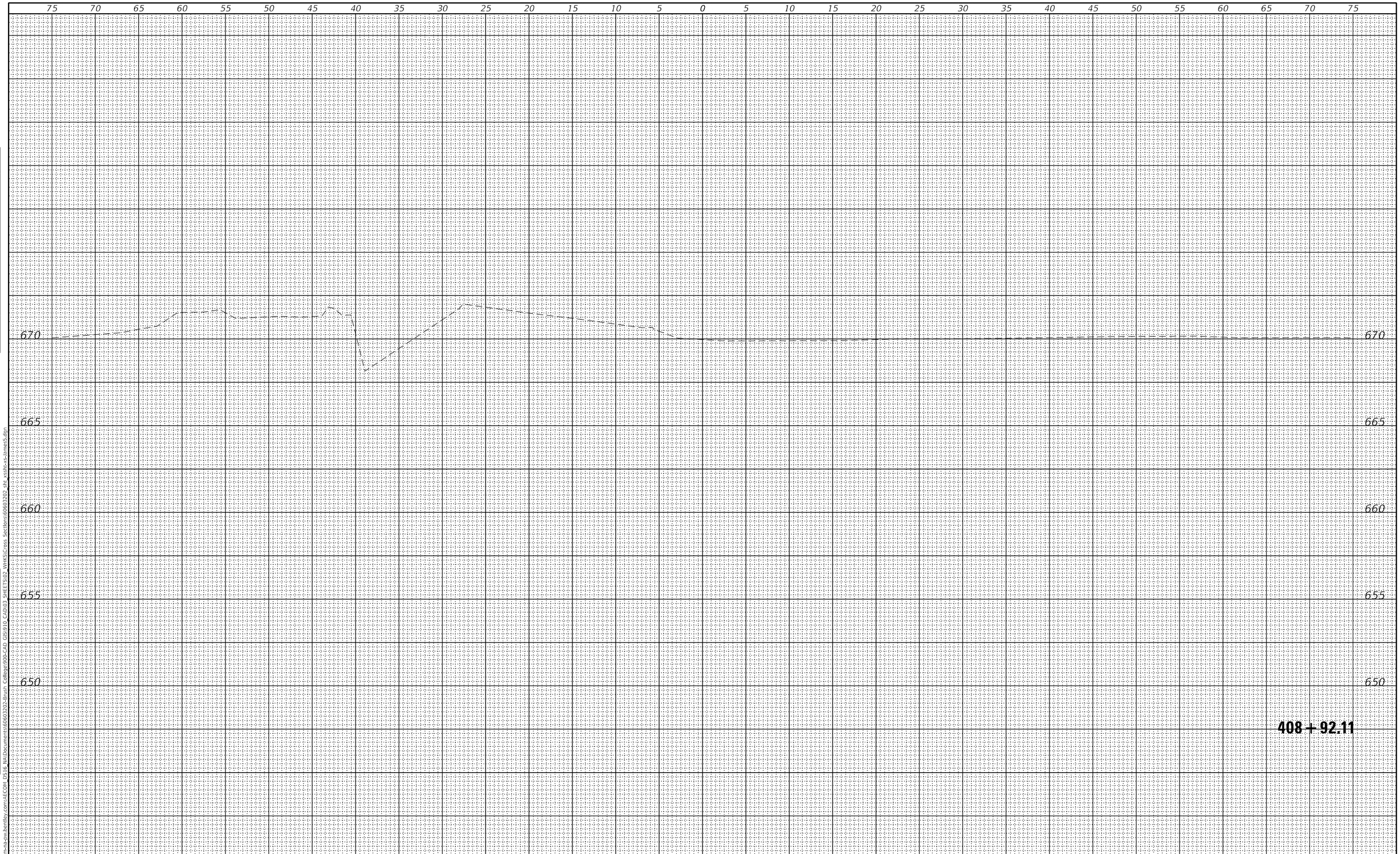

FINAL SURVEY		BY	DATE
NOTE BOOK	SURVEYED		
	PLOTTED		
	TEMPLATE		
	AREAS		
NO.	AREAS CHECKED		

ORIGINAL SURVEY		BY	DATE
NOTE BOOK	SURVEYED		
	PLOTTED		
	TEMPLATE		
	AREAS		
NO.	AREAS CHECKED		

MODEL: Default
FILE NAME: pw:\\aecom-na-sw.bentley.com:AECOM DS16 NA\documents\60603202-Brush College90b-CAD GIS\910 CAD\03 SHEETS\02 VHKS\Cross Sections\60603202 sht xssht-xs-James5.dgn

design firm no. 184001036
whks
engineers + planners + land surveyors

USER NAME = $OPERATOR$	DESIGNED - -	REVISED
	CHECKED - -	REVISED
PLOT SCALE = 10.0000 ' / in.	DRAWN - -	REVISED
PLOT DATE = 10/30/2020	CHECKED - -	REVISED

STATE OF ILLINOIS
DEPARTMENT OF TRANSPORTATION

NORTH JAMES STREET
CROSS SECTIONS

SCALE: 1" = 5' | SHEET 23 OF 23 SHEETS | STA. 408+92.11 TO STA. 408+92.11

F.A.U. RTE.	SECTION	COUNTY	TOTAL SHEETS	SHEET NO.
7448	09-00933-01-BR	MACON	996	896

CONTRACT NO. 6WGY(165)

ILLINOIS | FED. AID PROJECT

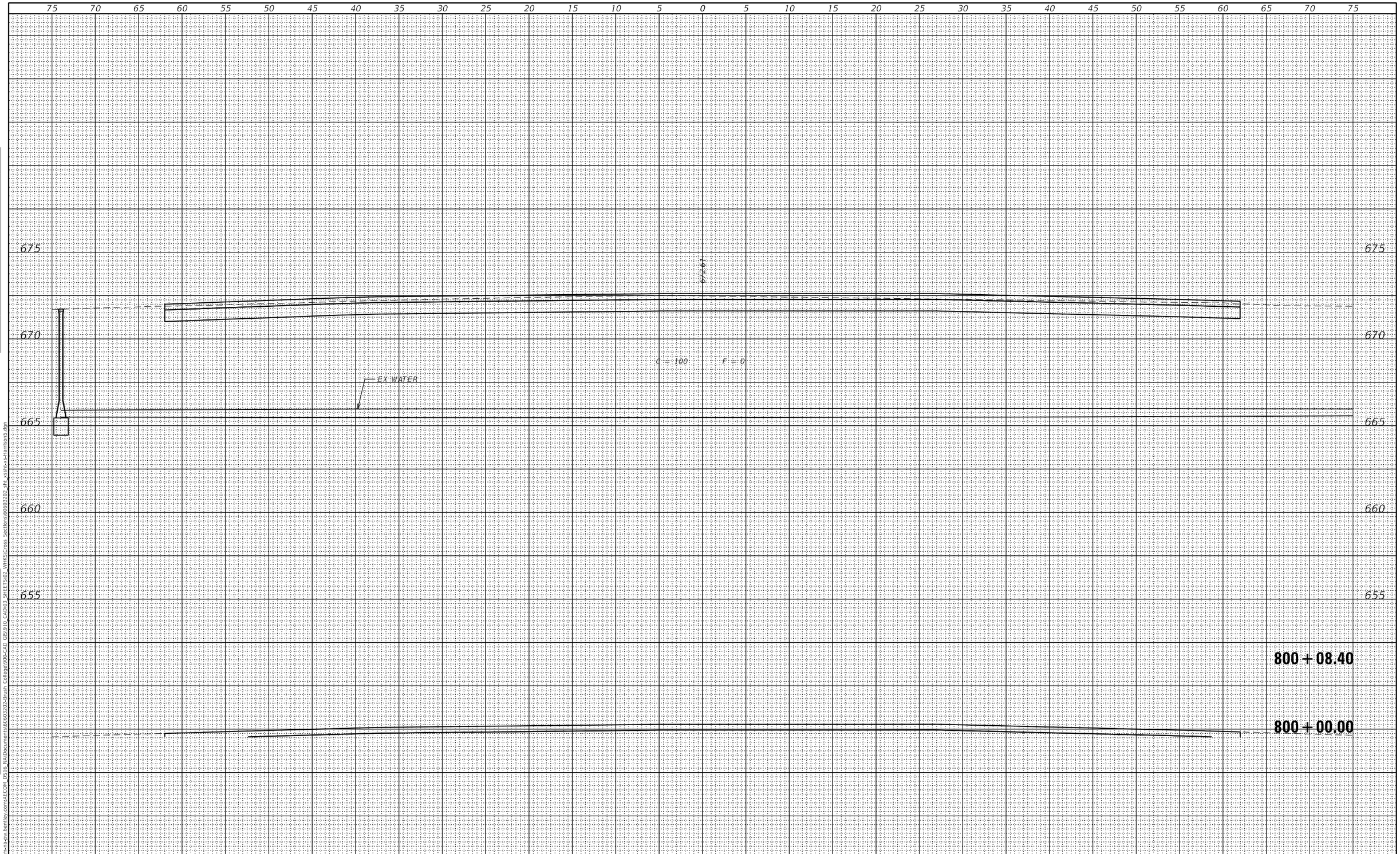

FINAL SURVEY		BY	DATE
NOTE BOOK	SURVEYED		
	PLOTTED		
	TEMPLATE		
	AREAS		
NO.	AREAS CHECKED		

ORIGINAL SURVEY		BY	DATE
NOTE BOOK	SURVEYED		
	PLOTTED		
	TEMPLATE		
	AREAS		
NO.	AREAS CHECKED		

MODEL: Default
FILE NAME: pw:\\aecom-na-sw.bentley.com:AECOM DS16 NA\Documents\60603202-Brush College\90b-CAD GIS\910 CAD\03 SHEETS\02 VHKS\Cross Sections\60603202 sht xssht-xs-tlantion5.dgn

design firm no. 184001036
whks
engineers + planners + land surveyors

USER NAME = $OPERATOR$	DESIGNED - -	REVISED
	CHECKED - -	REVISED
PLOT SCALE = 10.0000 ' / in.	DRAWN - -	REVISED
PLOT DATE = 10/30/2020	CHECKED - -	REVISED

STATE OF ILLINOIS
DEPARTMENT OF TRANSPORTATION

E HARRISON AVENUE (WEST LEG)
CROSS SECTIONS

SCALE: 1" = 5' | SHEET 1 OF 58 SHEETS | STA. 800+00.00 TO STA. 800+08.40

F.A.U. RTE.	SECTION	COUNTY	TOTAL SHEETS	SHEET NO.
7448	09-00933-01-BR	MACON	996	897

CONTRACT NO. 6WGY(165)

ILLINOIS | FED. AID PROJECT

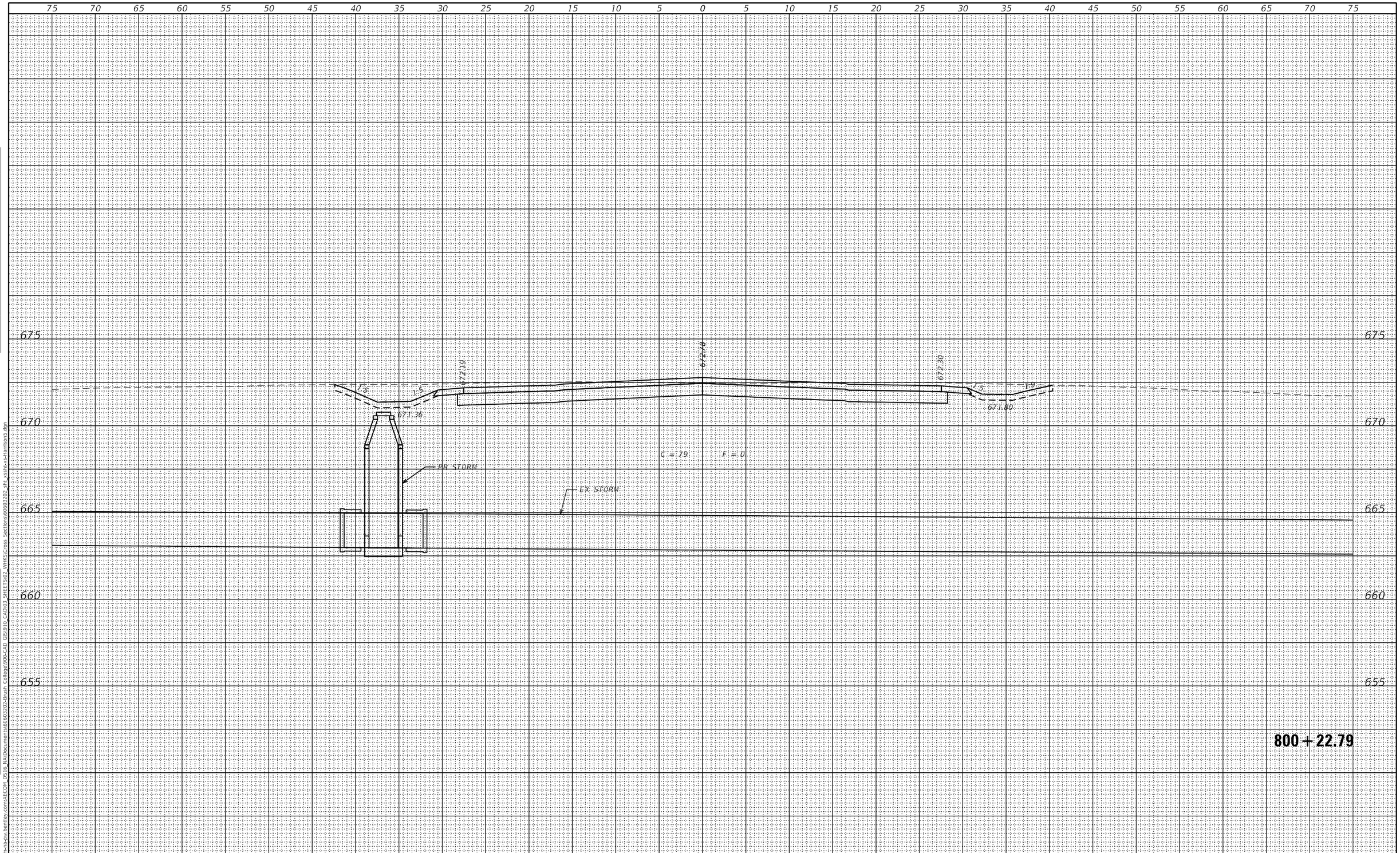

FINAL SURVEY		BY	DATE
	SURVEYED		
	PLOTTED		
NOTE BOOK	TEMPLATE		
	AREAS		
NO.	AREAS CHECKED		

ORIGINAL SURVEY		BY	DATE
	SURVEYED		
	PLOTTED		
NOTE BOOK	TEMPLATE		
	AREAS		
NO.	AREAS CHECKED		

MODEL: Default
FILE NAME: pw:\\aecom-na-pw.bentley.com:AECOM DS16 NA\Documents\60603202-Brush College\900-CAD GIS\10 CAD\03 SHEETS\02 WHKS\Cross Sections\60603202_sht_xssln-xs-harrison5.dgn

design firm no. 184001036
whks
engineers + planners + land surveyors

USER NAME = $OPERATOR$	DESIGNED - -	REVISED	
	CHECKED - -	REVISED	
PLOT SCALE = 10.0000 ' / in.	DRAWN - -	REVISED	
PLOT DATE = 10/30/2020	CHECKED - -	REVISED	

STATE OF ILLINOIS
DEPARTMENT OF TRANSPORTATION

E HARRISON AVENUE (WEST LEG)
CROSS SECTIONS

SCALE: 1" = 5' | SHEET 2 OF 58 SHEETS | STA. 800+22.79 TO STA. 800+22.79

F.A.U. RTE.	SECTION	COUNTY	TOTAL SHEETS	SHEET NO.
7448	09-00933-01-BR	MACON	996	898

CONTRACT NO. 6WGY(165)

ILLINOIS | FED. AID PROJECT

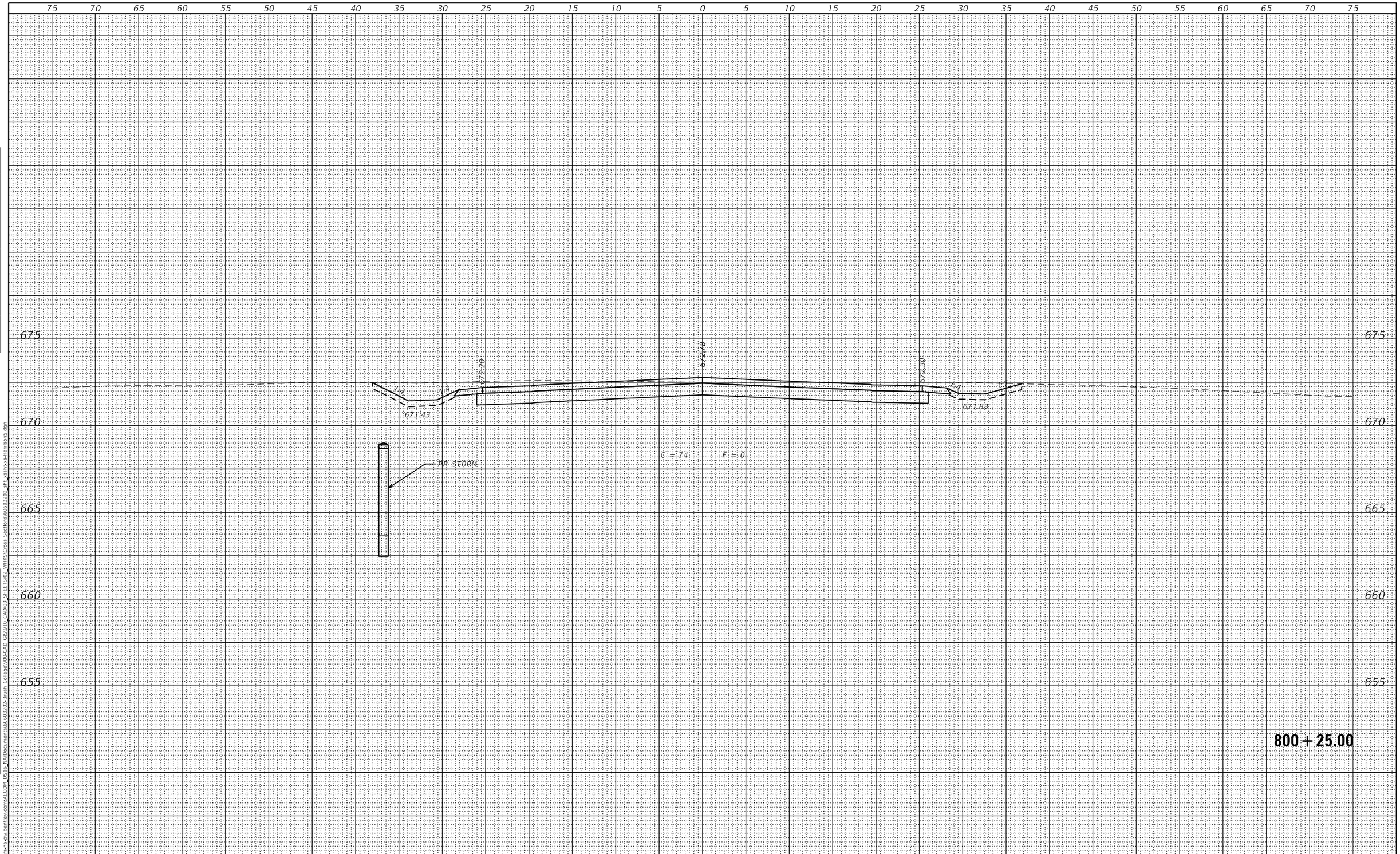

FINAL SURVEY		BY	DATE
NOTE BOOK	SURVEYED		
	PLOTTED		
	TEMPLATE		
	AREAS		
NO.	AREAS CHECKED		

ORIGINAL SURVEY		BY	DATE
NOTE BOOK	SURVEYED		
	PLOTTED		
	TEMPLATE		
	AREAS		
NO.	AREAS CHECKED		

MODEL: Default
FILE NAME: pw:\\aecom-na-pw.bentley.com:AECOM DS16 NA\Documents\60603202-Brush College90b-CAD GIS\910 CAD\03 SHEETS\02 VHKS\Cross Sections\60603202 sht xsshi-xs-harrison5.dgn

design firm no. 184001036
whks
engineers + planners + land surveyors

USER NAME = $OPERATOR$	DESIGNED - -	REVISED	
	CHECKED - -	REVISED	
PLOT SCALE = 10.0000 ' / in.	DRAWN - -	REVISED	
PLOT DATE = 10/30/2020	CHECKED - -	REVISED	

STATE OF ILLINOIS
DEPARTMENT OF TRANSPORTATION

E HARRISON AVENUE (WEST LEG)
CROSS SECTIONS

SCALE: 1" = 5' | SHEET 3 OF 58 SHEETS | STA. 800+25.00 TO STA. 800+25.00

F.A.U. RTE.	SECTION	COUNTY	TOTAL SHEETS	SHEET NO.
7448	09-00933-01-BR	MACON	996	899

CONTRACT NO. 6WGY(165)

ILLINOIS | FED. AID PROJECT

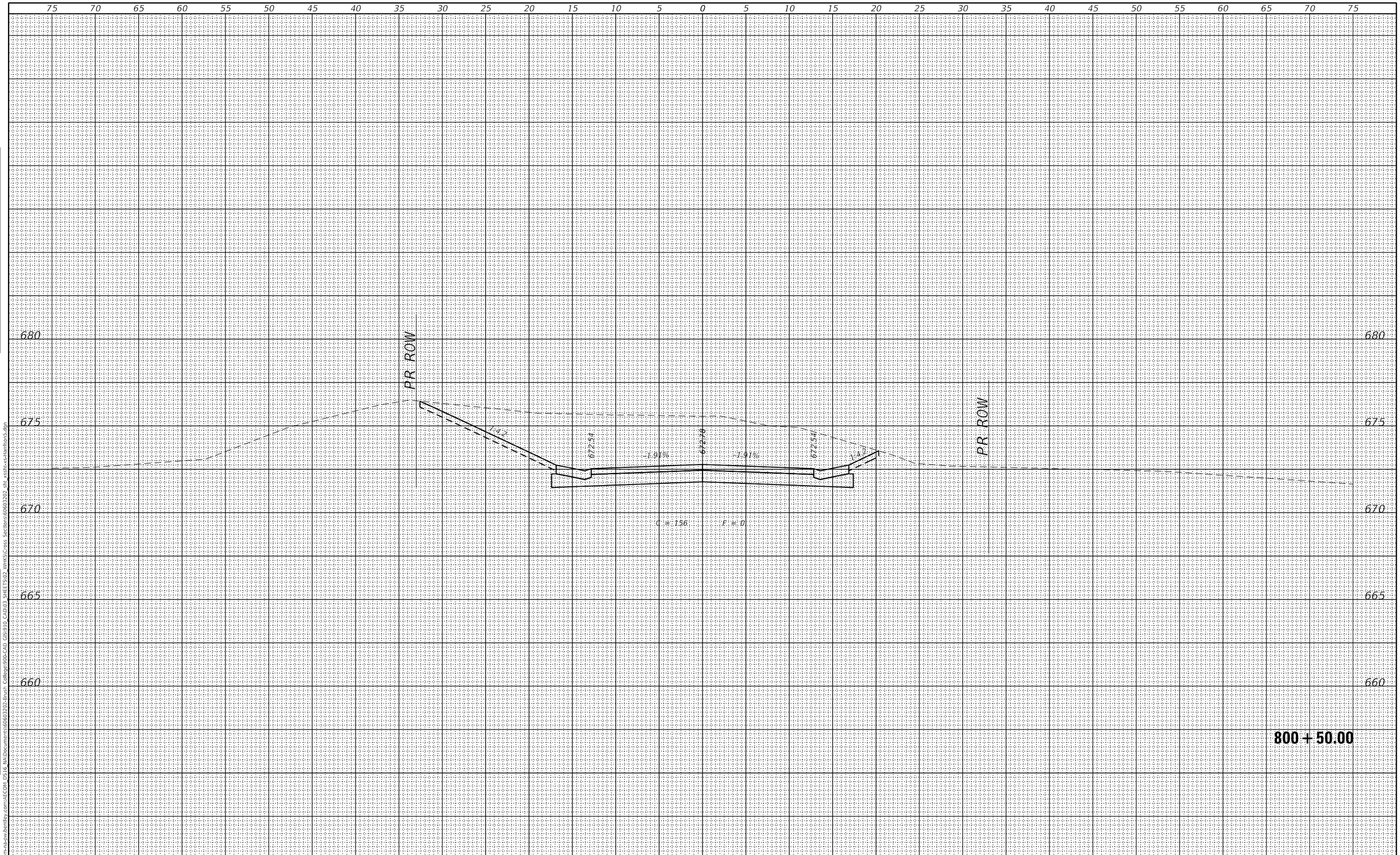

FINAL SURVEY		BY	DATE
NOTE BOOK	SURVEYED		
	PLOTTED		
	TEMPLATE		
	AREAS		
NO.	AREAS CHECKED		

ORIGINAL SURVEY		BY	DATE
NOTE BOOK	SURVEYED		
	PLOTTED		
	TEMPLATE		
	AREAS		
NO.	AREAS CHECKED		

MODEL: Default
FILE NAME: pw:\\aecom-na-pw.bentley.com:AECOM DS16 NA\Documents\60603202-Brush College\900-CAD GIS\910 CAD\03 SHEETS\02 WHKS\Cross Sections\60603202_sht_xssln-xs-harrison5.dgn

design firm no. 184001036
whks
engineers + planners + land surveyors

USER NAME = $OPERATOR$	DESIGNED - -	REVISED	
	CHECKED - -	REVISED	
PLOT SCALE = 10.0000 ' / in.	DRAWN - -	REVISED	
PLOT DATE = 10/30/2020	CHECKED - -	REVISED	

STATE OF ILLINOIS
DEPARTMENT OF TRANSPORTATION

E HARRISON AVENUE (WEST LEG)
CROSS SECTIONS

SCALE: 1" = 5' | SHEET 4 OF 58 SHEETS | STA. 800+50.00 TO STA. 800+50.00

F.A.U. RTE.	SECTION	COUNTY	TOTAL SHEETS	SHEET NO.
7448	09-00933-01-BR	MACON	996	900

CONTRACT NO. 6WGY(165)

ILLINOIS | FED. AID PROJECT

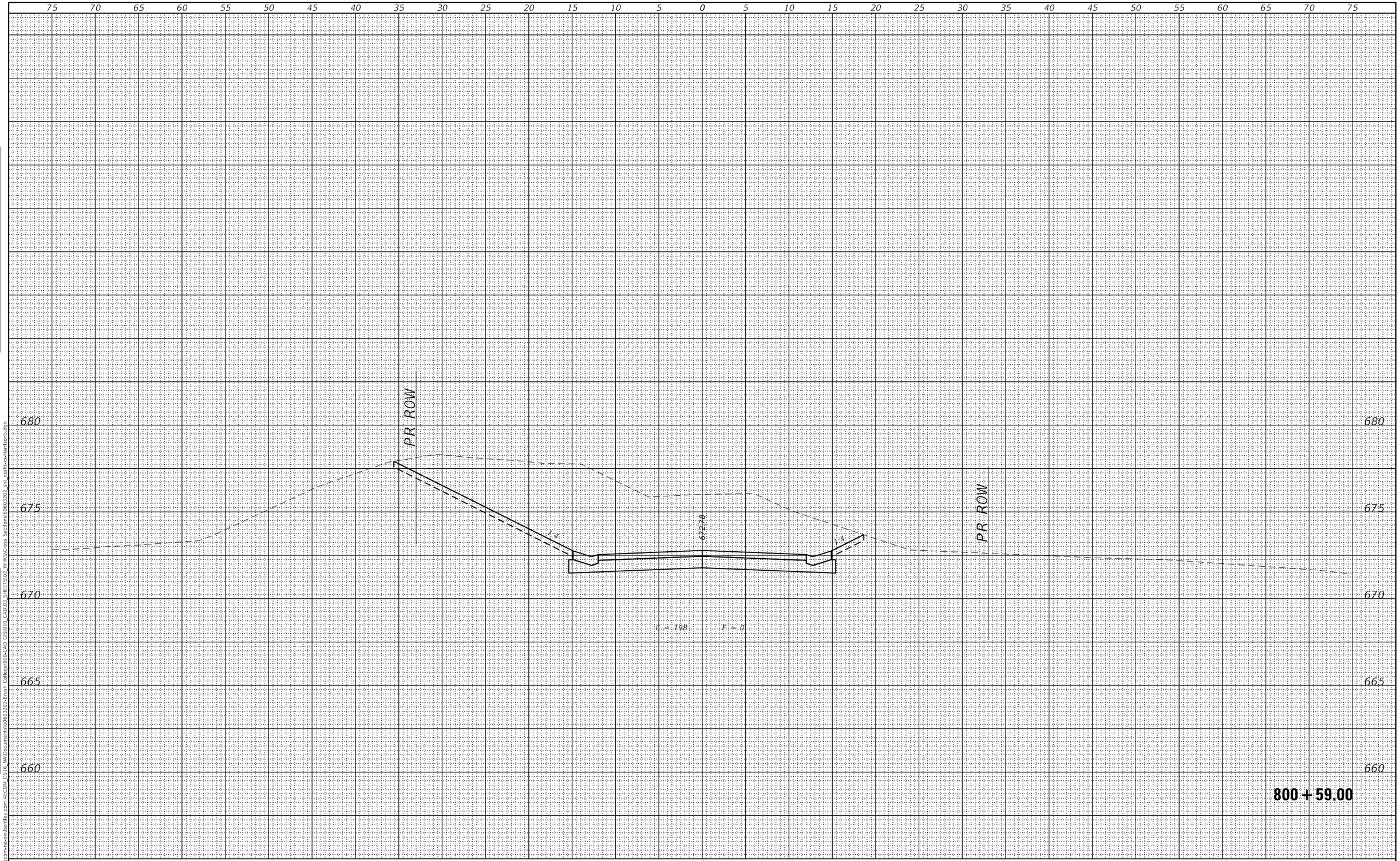

FINAL SURVEY		BY	DATE
	SURVEYED		
	PLOTTED		
NOTE BOOK	TEMPLATE		
	AREAS		
NO.	AREAS CHECKED		

ORIGINAL SURVEY		BY	DATE
	SURVEYED		
	PLOTTED		
NOTE BOOK	TEMPLATE		
	AREAS		
NO.	AREAS CHECKED		

MODEL: Default
FILE NAME: pw:\\aecom-na-pw.bentley.com:AECOM DS16 NA\Documents\60603202-Brush College\900-CAD GIS\910_CAD\03 SHEETS\02 WHKS\Cross Sections\60603202_sht_xsshtcx-Harrison5.dgn

design firm no. 184001036
whks
engineers + planners + land surveyors

USER NAME = $OPERATOR$	DESIGNED - -	REVISED
	CHECKED - -	REVISED
PLOT SCALE = 10.0000 ' / in.	DRAWN - -	REVISED
PLOT DATE = 10/30/2020	CHECKED - -	REVISED

STATE OF ILLINOIS
DEPARTMENT OF TRANSPORTATION

E HARRISON AVENUE (WEST LEG)
CROSS SECTIONS

SCALE: 1" = 5' | SHEET 5 OF 58 SHEETS | STA. 800+59.00 TO STA. 800+59.00

F.A.U. RTE.	SECTION	COUNTY	TOTAL SHEETS	SHEET NO.
7448	09-00933-01-BR	MACON	996	901

CONTRACT NO. 6WGY(165)

ILLINOIS | FED. AID PROJECT

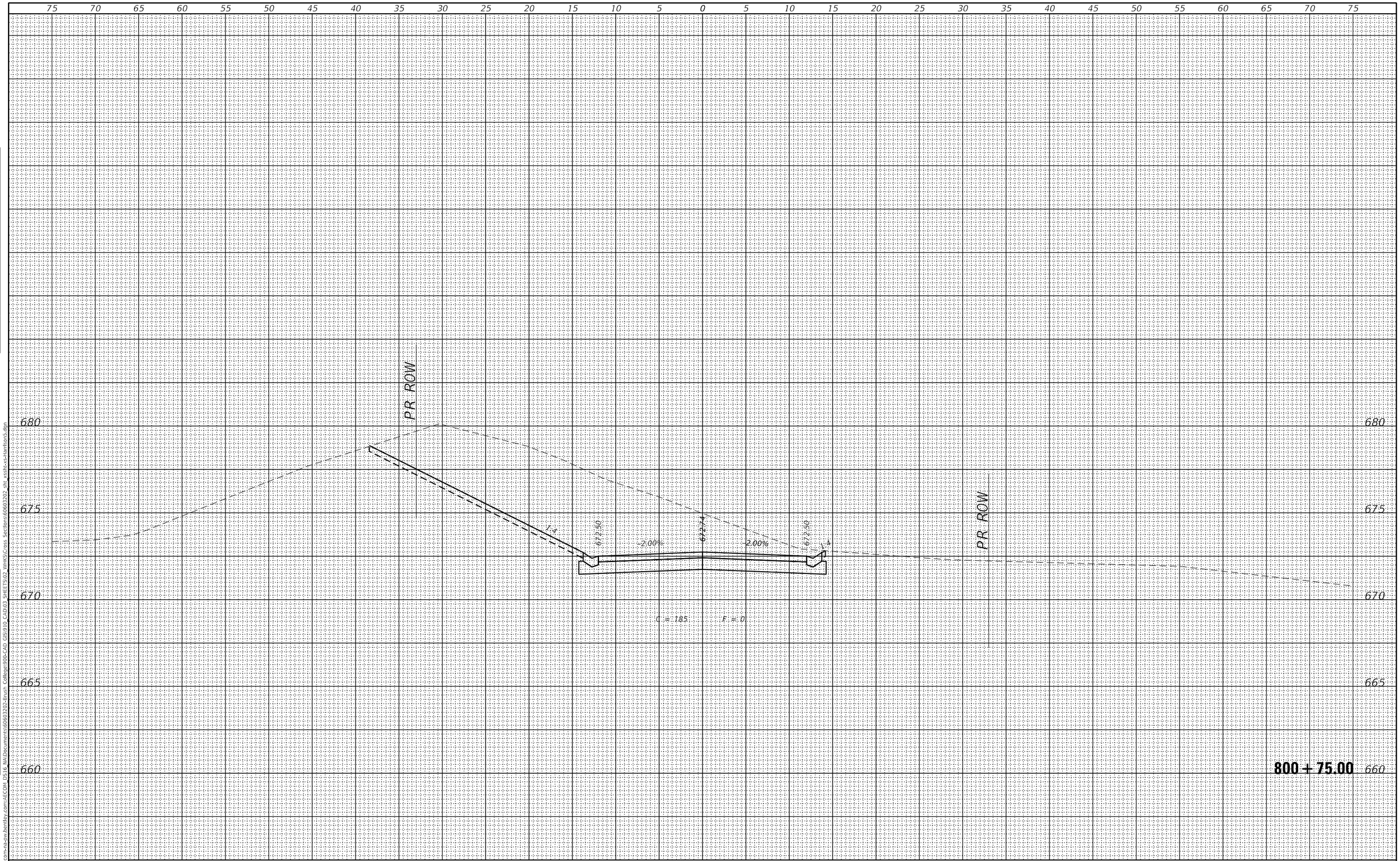

FINAL SURVEY	BY	DATE
SURVEYED		
PLOTTED		
TEMPLATE		
AREAS		
AREAS CHECKED		

NOTE BOOK
NO.

ORIGINAL SURVEY	BY	DATE
SURVEYED		
PLOTTED		
TEMPLATE		
AREAS		
AREAS CHECKED		

NOTE BOOK
NO.

MODEL: Default
FILE NAME: pw:\\aecom-na-pw.bentley.com:AECOM DS16 NA\Documents\60603202-Brush College\900-CAD GIS\910_CAD\03 SHEETS\02 WHKS\Cross Sections\60603202_sht_xsshi-xs-harrison5.dgn

design firm
no. 184001036

whks
engineers + planners + land surveyors

USER NAME = $OPERATOR$	DESIGNED - -	REVISED	
	CHECKED - -	REVISED	
PLOT SCALE = 10.0000 ' / in.	DRAWN - -	REVISED	
PLOT DATE = 10/30/2020	CHECKED - -	REVISED	

STATE OF ILLINOIS
DEPARTMENT OF TRANSPORTATION

E HARRISON AVENUE (WEST LEG)
CROSS SECTIONS

SCALE: 1" = 5' | SHEET 6 OF 58 SHEETS | STA. 800+75.00 TO STA. 800+75.00

F.A.U. RTE.	SECTION	COUNTY	TOTAL SHEETS	SHEET NO.
7448	09-00933-01-BR	MACON	996	902

CONTRACT NO. 6WGY(165)

ILLINOIS | FED. AID PROJECT

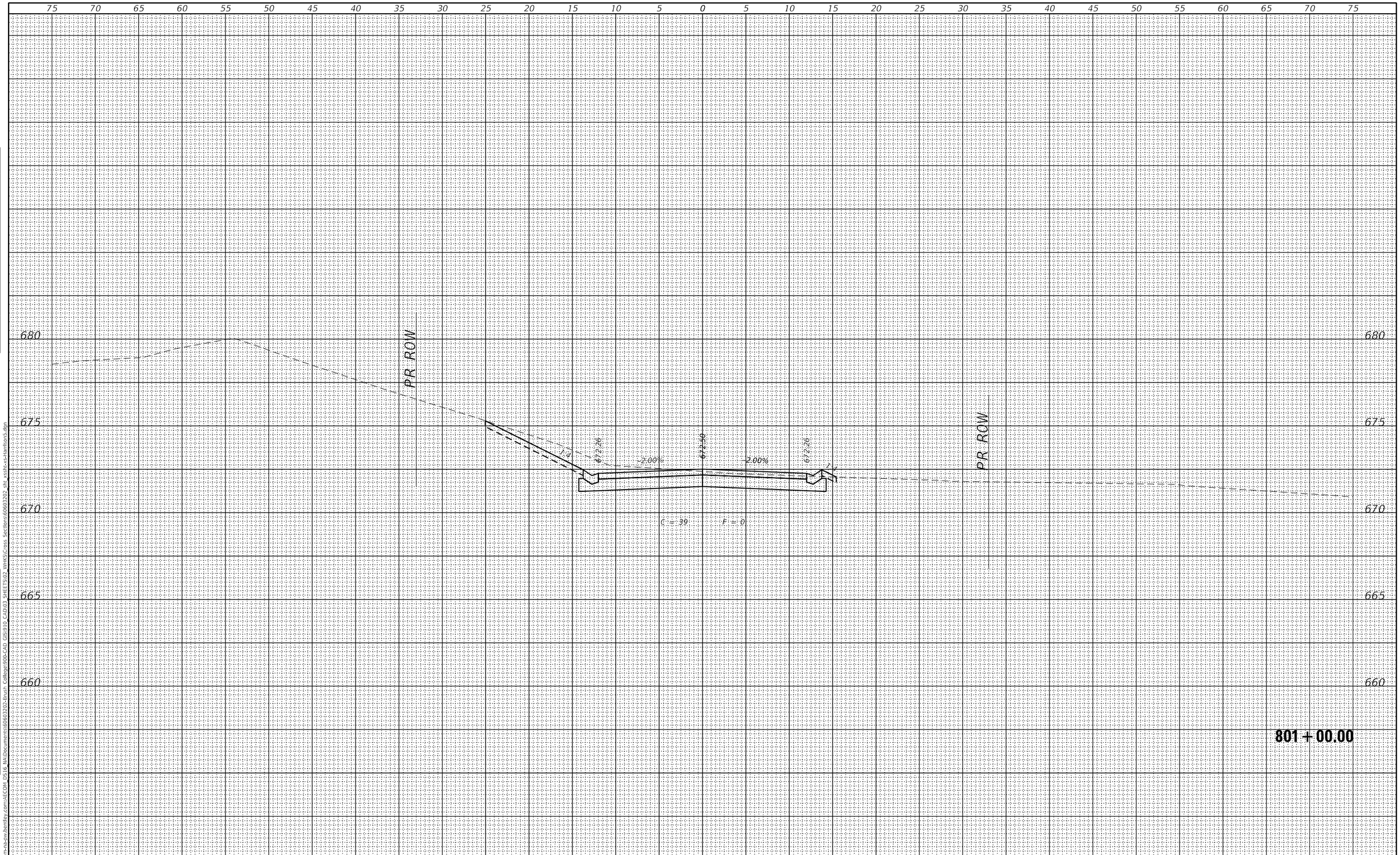

FINAL SURVEY		BY	DATE
	SURVEYED		
	PLOTTED		
NOTE BOOK	TEMPLATE		
	AREAS		
	AREAS CHECKED		
NO.			

ORIGINAL SURVEY		BY	DATE
	SURVEYED		
	PLOTTED		
NOTE BOOK	TEMPLATE		
	AREAS		
	AREAS CHECKED		
NO.			

MODEL: Default
FILE NAME: pw:\\aecom-na-pw.bentley.com:AECOM DS16 NA\Documents\60603202-Brush College\900-CAD GDS\910 CAD\03 SHEETS\02 WHKS\Cross Sections\60603202_sht_xssln-xs-harrison5.dgn

design firm no. 184001036
whks
engineers + planners + land surveyors

USER NAME = $OPERATOR$	DESIGNED - -	REVISED	
	CHECKED - -	REVISED	
PLOT SCALE = 10.0000 ' / in.	DRAWN - -	REVISED	
PLOT DATE = 10/30/2020	CHECKED - -	REVISED	

STATE OF ILLINOIS
DEPARTMENT OF TRANSPORTATION

E HARRISON AVENUE (WEST LEG)
CROSS SECTIONS

SCALE: 1" = 5' | SHEET 7 OF 58 SHEETS | STA. 801+00.00 TO STA. 801+00.00

F.A.U. RTE.	SECTION	COUNTY	TOTAL SHEETS	SHEET NO.
7448	09-00933-01-BR	MACON	996	903

CONTRACT NO. 6WGY(165)

ILLINOIS | FED. AID PROJECT

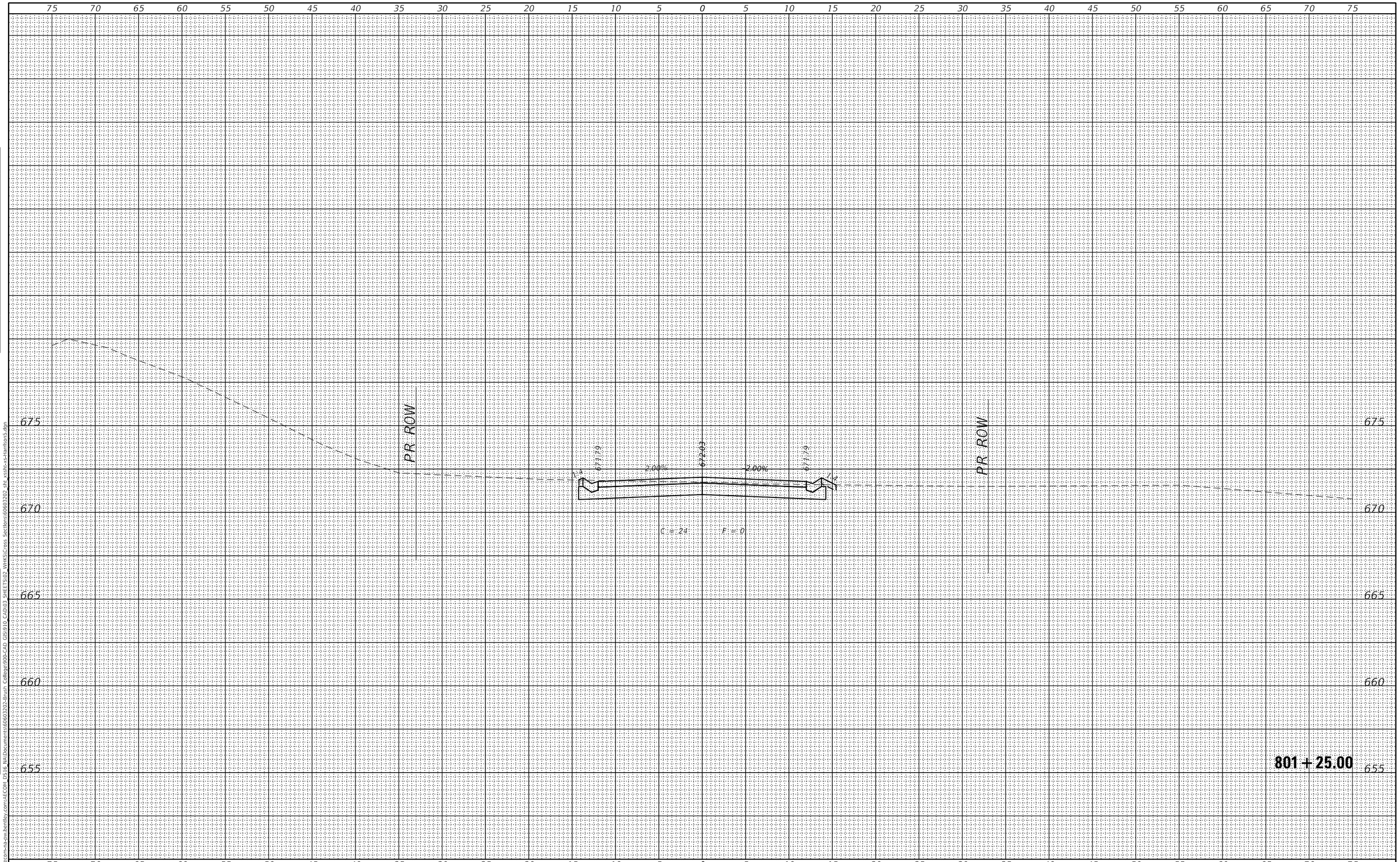

FINAL SURVEY		BY	DATE
NOTE BOOK	SURVEYED		
	PLOTTED		
	TEMPLATE		
	AREAS		
NO.	AREAS CHECKED		

ORIGINAL SURVEY		BY	DATE
NOTE BOOK	SURVEYED		
	PLOTTED		
	TEMPLATE		
	AREAS		
NO.	AREAS CHECKED		

MODEL: Default
FILE NAME: pw:\\aecom-na-pw.bentley.com:AECOM DS16 NA\Document\60603202-Brush College\900-CAD GIS\910 CADD\3 SHEETS\02 WHKS\Cross Sections\60603202 sht xssh-xc-Harrison5.dgn

design firm no. 184001036
whks
engineers + planners + land surveyors

USER NAME = $OPERATOR$	DESIGNED - -	REVISED	
	CHECKED - -	REVISED	
PLOT SCALE = 10.0000 ' / in.	DRAWN - -	REVISED	
PLOT DATE = 10/30/2020	CHECKED - -	REVISED	

STATE OF ILLINOIS
DEPARTMENT OF TRANSPORTATION

E HARRISON AVENUE (WEST LEG)
CROSS SECTIONS

SCALE: 1" = 5' | SHEET 8 OF 58 SHEETS | STA. 801+25.00 TO STA. 801+25.00

F.A.U. RTE.	SECTION	COUNTY	TOTAL SHEETS	SHEET NO.
7448	09-00933-01-BR	MACON	996	904

CONTRACT NO. 6WGY(165)

ILLINOIS | FED. AID PROJECT

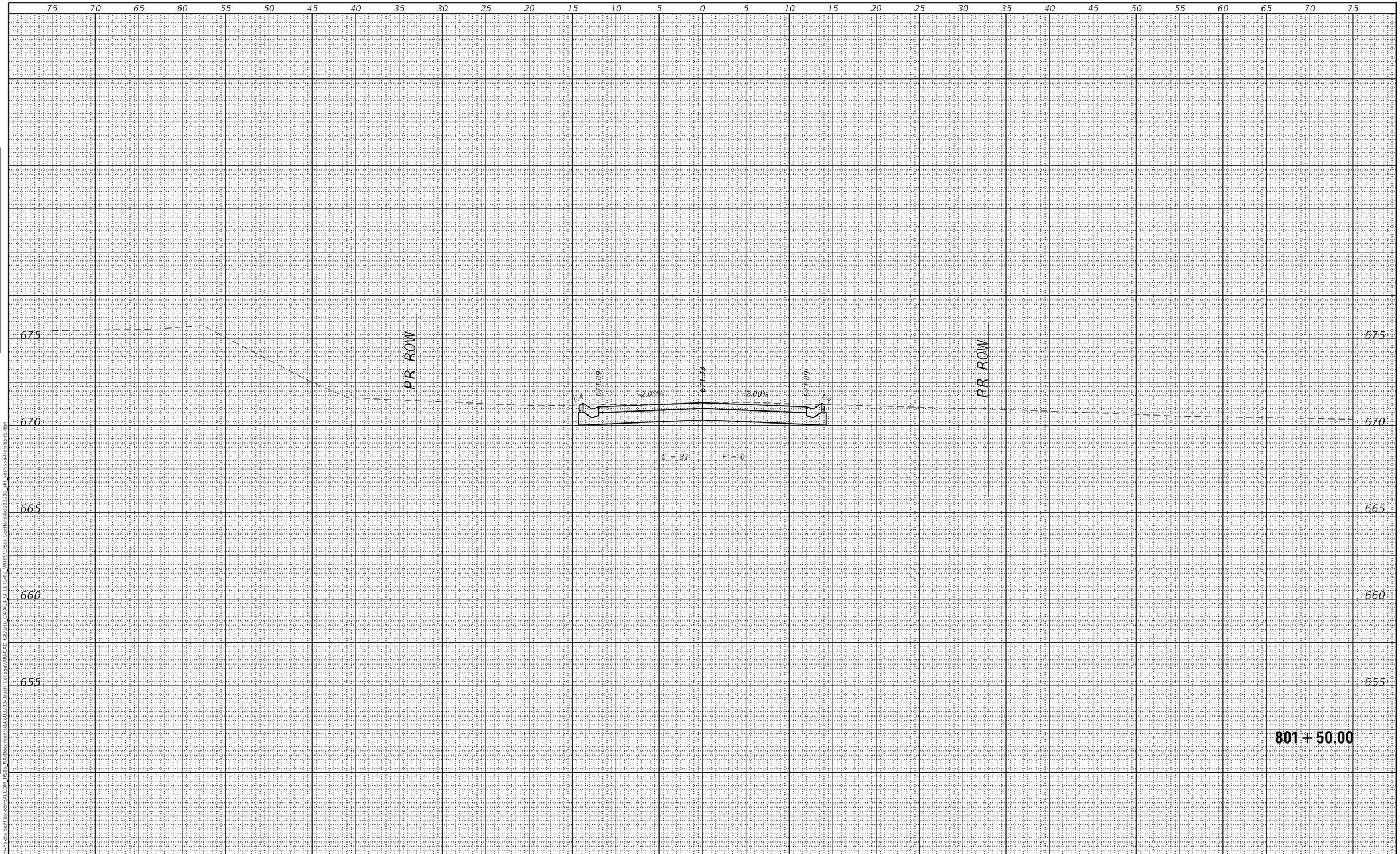

FINAL SURVEY		BY	DATE
	SURVEYED		
	PLOTTED		
NOTE BOOK	TEMPLATE		
	AREAS		
NO.	AREAS CHECKED		

ORIGINAL SURVEY		BY	DATE
	SURVEYED		
	PLOTTED		
NOTE BOOK	TEMPLATE		
	AREAS		
NO.	AREAS CHECKED		

MODEL: Default
FILE NAME: pw:\\aecom-na-sw.bentley.com:AECOM DS16 NA\Documents\60603202-Brush College90b-CAD GIS\910 CAD\03 SHEETS\02 VHKS\Cross Sections\60603202 sht xssh-xs-harrison5.dgn

design firm no. 184001036
whks
engineers + planners + land surveyors

USER NAME = $OPERATOR$	DESIGNED - -	REVISED	
	CHECKED - -	REVISED	
PLOT SCALE = 10.0000 ' / in.	DRAWN - -	REVISED	
PLOT DATE = 10/30/2020	CHECKED - -	REVISED	

STATE OF ILLINOIS
DEPARTMENT OF TRANSPORTATION

E HARRISON AVENUE (WEST LEG)
CROSS SECTIONS

SCALE: 1" = 5' | SHEET 9 OF 58 SHEETS | STA. 801+50.00 TO STA. 801+50.00

F.A.U. RTE.	SECTION	COUNTY	TOTAL SHEETS	SHEET NO.
7448	09-00933-01-BR	MACON	996	905

CONTRACT NO. 6WGY(165)

ILLINOIS | FED. AID PROJECT

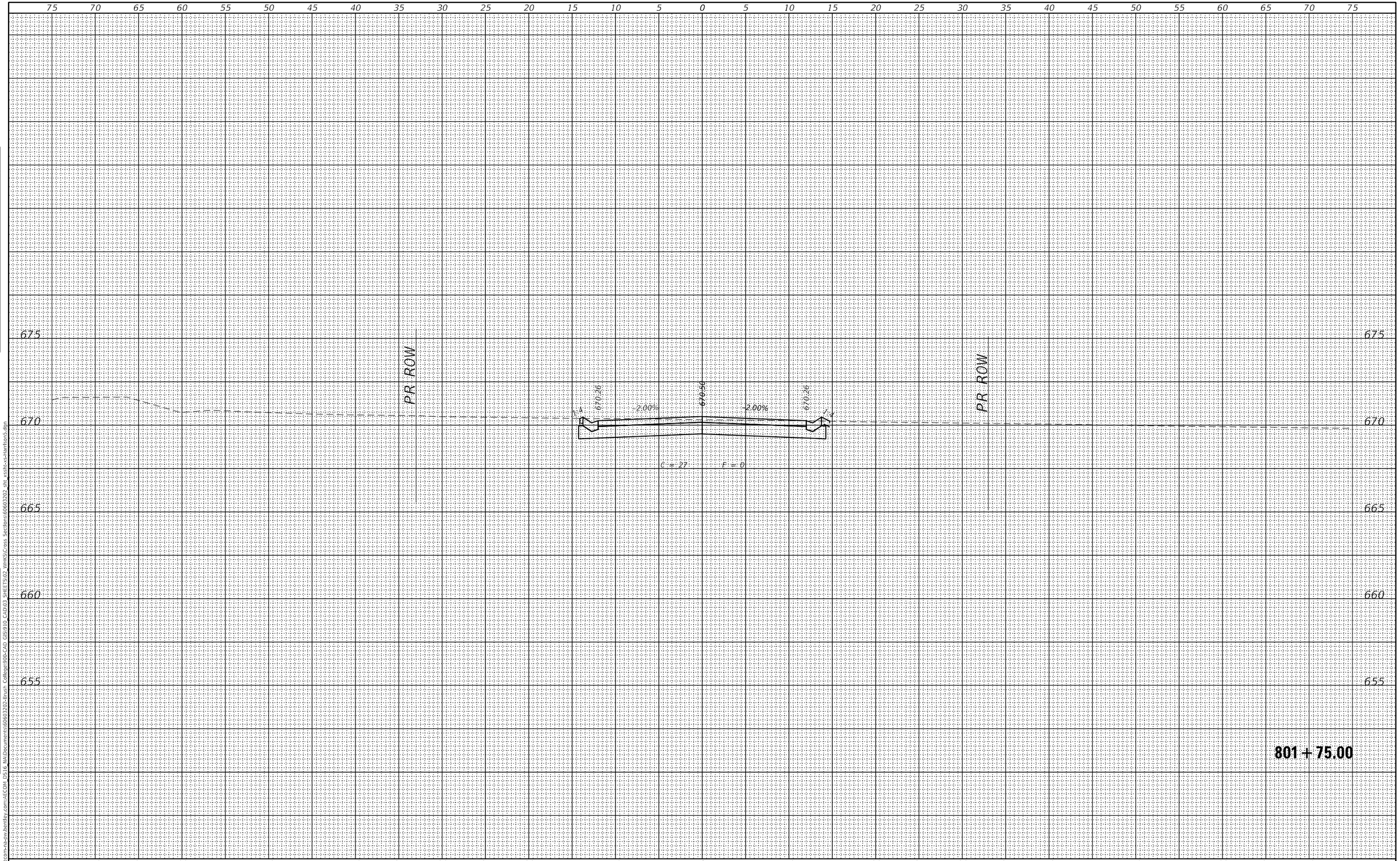

FINAL SURVEY		BY	DATE
	SURVEYED		
	PLOTTED		
NOTE BOOK	TEMPLATE		
	AREAS		
NO.	AREAS CHECKED		

ORIGINAL SURVEY		BY	DATE
	SURVEYED		
	PLOTTED		
NOTE BOOK	TEMPLATE		
	AREAS		
NO.	AREAS CHECKED		

MODEL: Default
FILE NAME: pw:\\aecom-na-pw.bentley.com:AECOM DS16 NA\Documents\60603202-Brush College\900-CAD GIS\910_CAD\03 SHEETS\02 WHKS\Cross Sections\60603202_sht_xsshit-xs-Harrison5.dgn

design firm
no. 184001036

whks
engineers + planners + land surveyors

USER NAME = $OPERATOR$	DESIGNED - -	REVISED
	CHECKED - -	REVISED
PLOT SCALE = 10.0000 ' / in.	DRAWN - -	REVISED
PLOT DATE = 10/30/2020	CHECKED - -	REVISED

STATE OF ILLINOIS
DEPARTMENT OF TRANSPORTATION

E HARRISON AVENUE (WEST LEG)
CROSS SECTIONS

SCALE: 1" = 5' | SHEET 10 OF 58 SHEETS | STA. 801+75.00 TO STA. 801+75.00

F.A.U. RTE.	SECTION	COUNTY	TOTAL SHEETS	SHEET NO.
7448	09-00933-01-BR	MACON	996	906

CONTRACT NO. 6WGY(165)

ILLINOIS | FED. AID PROJECT

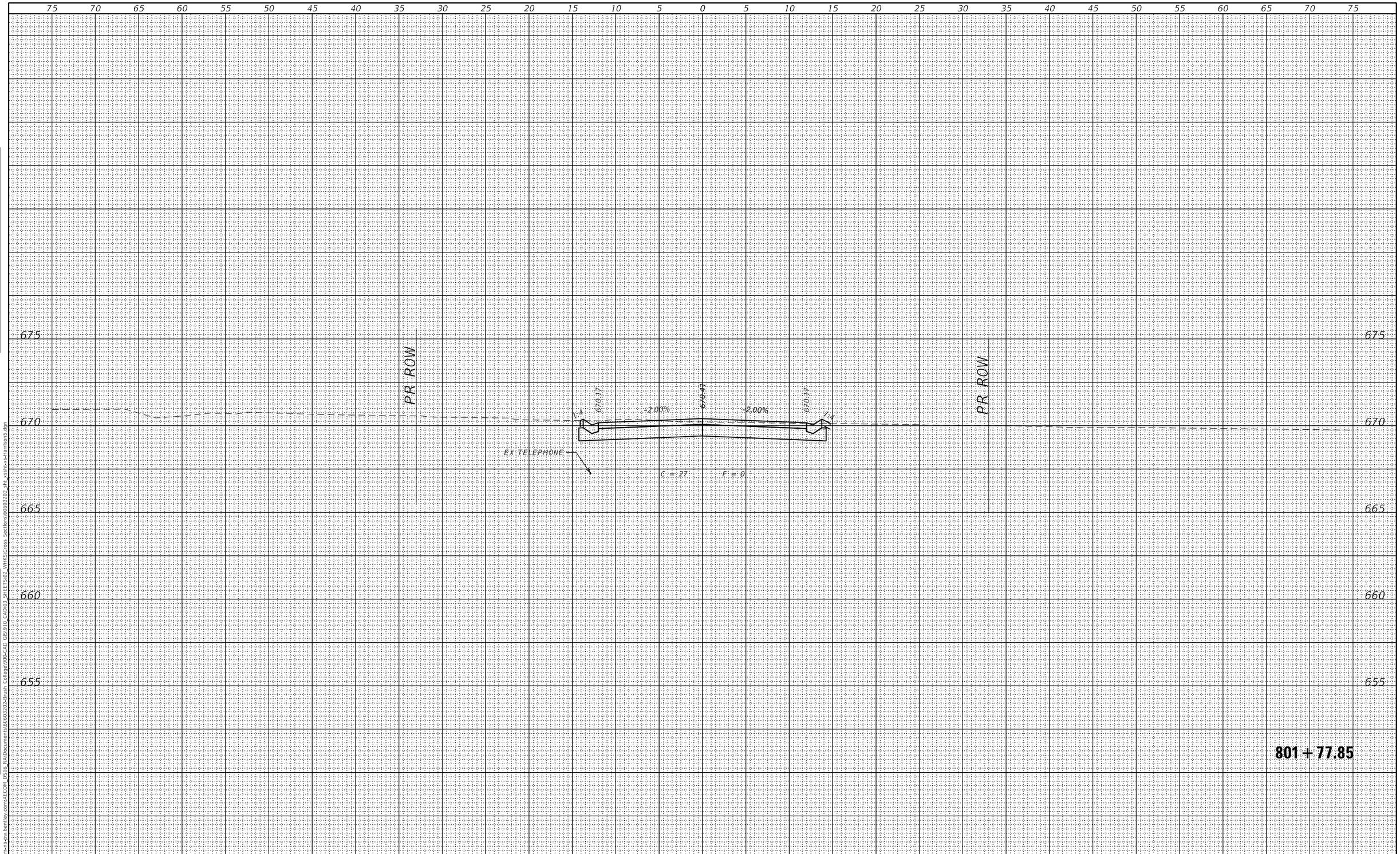

FINAL SURVEY	BY	DATE
SURVEYED		
PLOTTED		
TEMPLATE		
AREAS		
AREAS CHECKED		
NOTE BOOK		
NO.		

ORIGINAL SURVEY	BY	DATE
SURVEYED		
PLOTTED		
TEMPLATE		
AREAS		
AREAS CHECKED		
NOTE BOOK		
NO.		

MODEL: Default
FILE NAME: pw:\\aecom-na-sw.bentley.com:AECOM DS16 NA\Documents\60603202-Brush College90b-CAD GIS\910 CAD\03 SHEETS\02 VHKS\Cross Sections\60603202 sht xssh-xs-harrison5.dgn

design firm no. 184001036
whks
engineers + planners + land surveyors

USER NAME = $OPERATOR$	DESIGNED - -	REVISED	
	CHECKED - -	REVISED	
PLOT SCALE = 10,0000 ' / in.	DRAWN - -	REVISED	
PLOT DATE = 10/30/2020	CHECKED - -	REVISED	

STATE OF ILLINOIS
DEPARTMENT OF TRANSPORTATION

E HARRISON AVENUE (WEST LEG)
CROSS SECTIONS

SCALE: 1" = 5' | SHEET 11 OF 58 SHEETS | STA. 801+77.85 TO STA. 801+77.85

F.A.U. RTE.	SECTION	COUNTY	TOTAL SHEETS	SHEET NO.
7448	09-00933-01-BR	MACON	996	907

CONTRACT NO. 6WGY(165)

ILLINOIS | FED. AID PROJECT

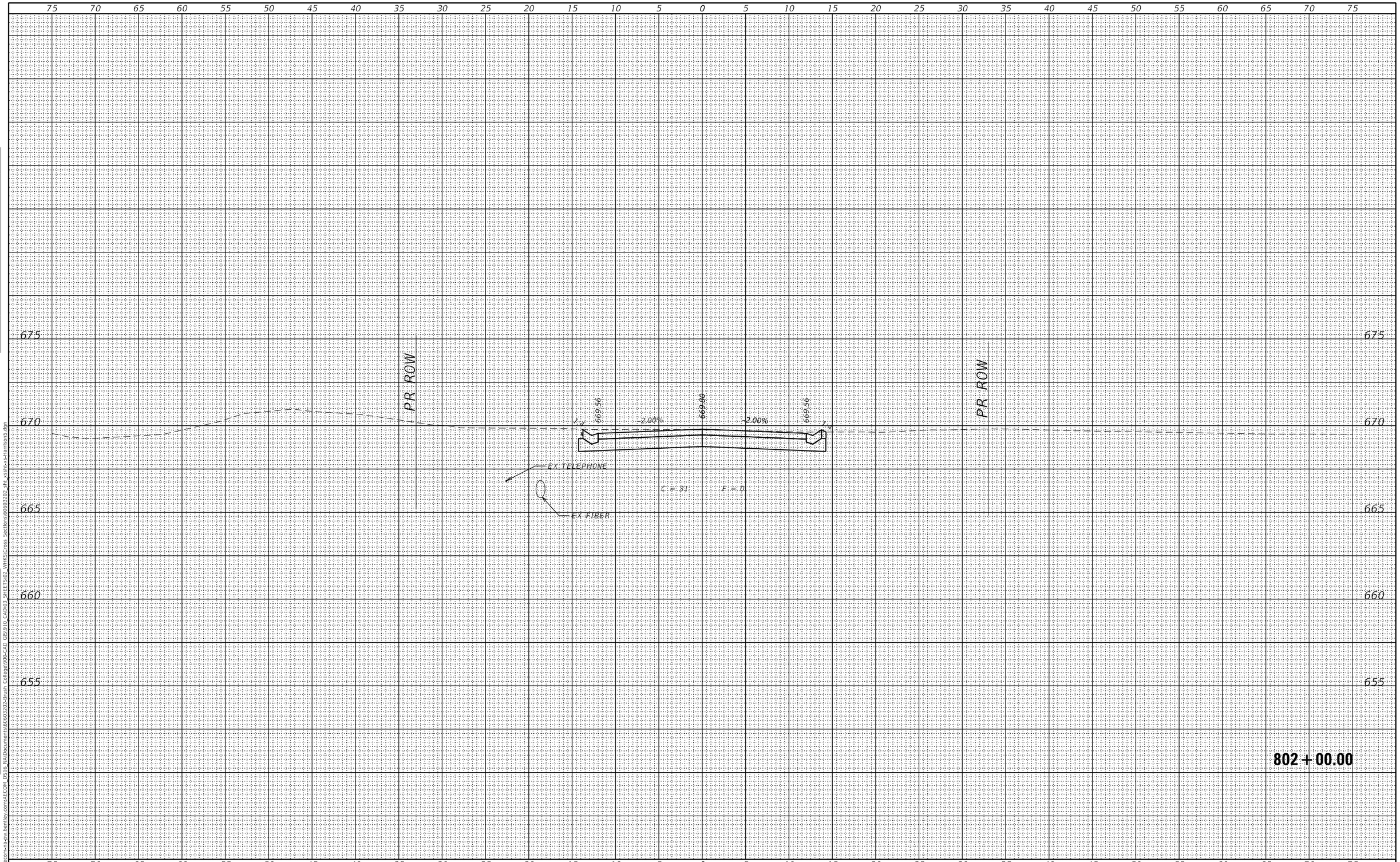

FINAL SURVEY		BY	DATE
NOTE BOOK	SURVEYED		
	PLOTTED		
	TEMPLATE		
	AREAS		
NO.	AREAS CHECKED		

ORIGINAL SURVEY		BY	DATE
NOTE BOOK	SURVEYED		
	PLOTTED		
	TEMPLATE		
	AREAS		
NO.	AREAS CHECKED		

MODEL: Default
FILE NAME: pw:\\aecom-na-pw.bentley.com:AECOM DS16 NA\Documents\60603202-Brush College\900-CAD GIS\910 CADD\3 SHEETS\02 WHKS\Cross Sections\60603202 sht xssh-xs-Harrison5.dgn

design firm no. 184001036
whks
engineers + planners + land surveyors

USER NAME = $OPERATOR$	DESIGNED - -	REVISED	
	CHECKED - -	REVISED	
PLOT SCALE = 10.0000 ' / in.	DRAWN - -	REVISED	
PLOT DATE = 10/30/2020	CHECKED - -	REVISED	

STATE OF ILLINOIS
DEPARTMENT OF TRANSPORTATION

E HARRISON AVENUE (WEST LEG)
CROSS SECTIONS

SCALE: 1" = 5' | SHEET 12 OF 58 SHEETS | STA. 802+00.00 TO STA. 802+00.00

F.A.U. RTE.	SECTION	COUNTY	TOTAL SHEETS	SHEET NO.
7448	09-00933-01-BR	MACON	996	908

CONTRACT NO. 6WGY(165)

ILLINOIS | FED. AID PROJECT

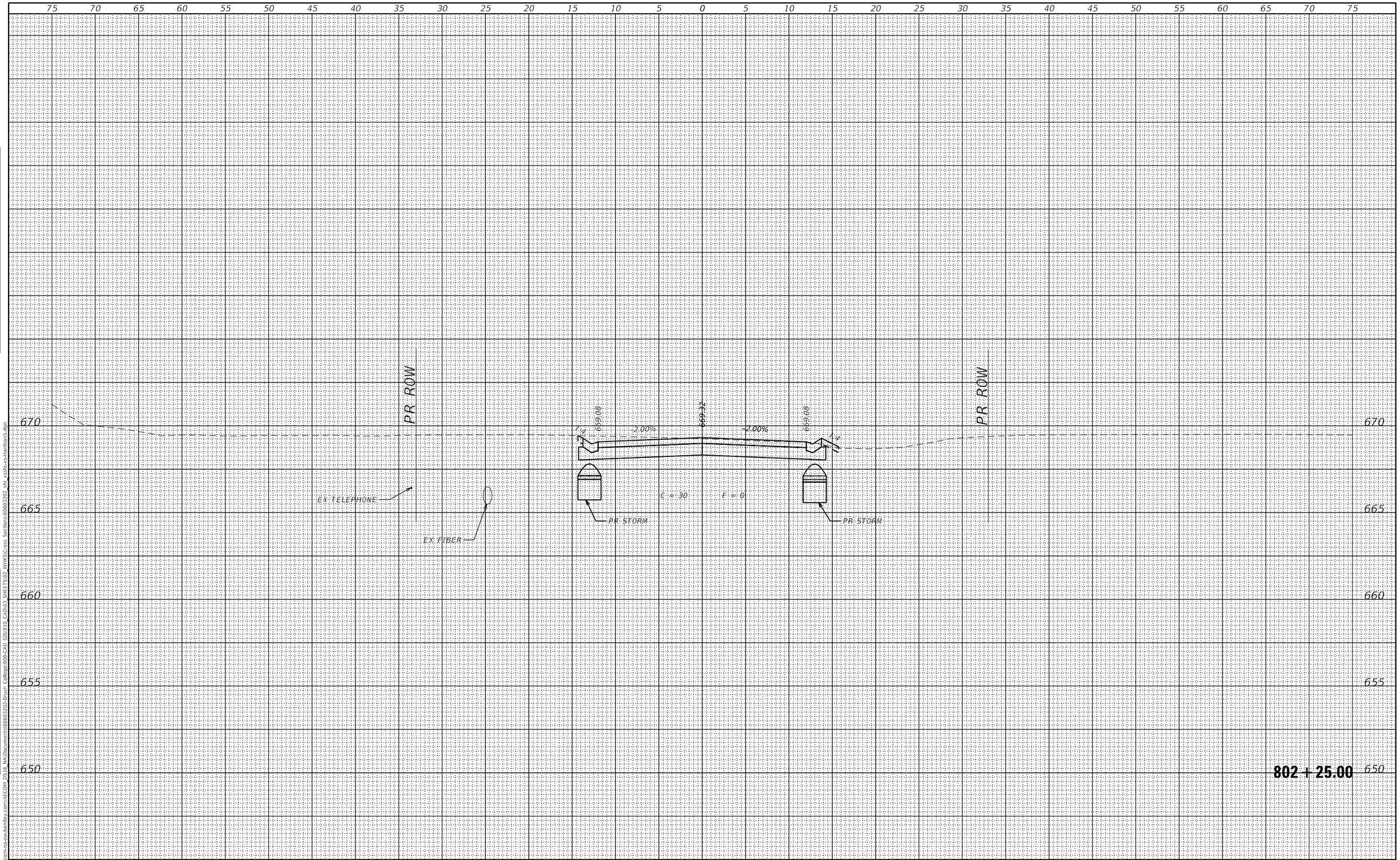

FINAL SURVEY		BY	DATE
NOTE BOOK	SURVEYED		
	PLOTTED		
	TEMPLATE		
	AREAS		
	AREAS CHECKED		
NO.			

ORIGINAL SURVEY		BY	DATE
NOTE BOOK	SURVEYED		
	PLOTTED		
	TEMPLATE		
	AREAS		
	AREAS CHECKED		
NO.			

NODEL: Default
FILE NAME: pw:\\aecom-na-pw.bentley.com:AECOM DS16 NA\Documents\60603202-Brush College\900-CAD GIS\910 CAD\03 SHEETS\02 VHKS\Cross Sections\60603202 sht xsshc-xs-Harrison5.dgn

design firm no. 184001036
whks
engineers + planners + land surveyors

USER NAME = $OPERATOR$	DESIGNED - -	REVISED	
	CHECKED - -	REVISED	
PLOT SCALE = 10.0000 ' / in.	DRAWN - -	REVISED	
PLOT DATE = 10/30/2020	CHECKED - -	REVISED	

STATE OF ILLINOIS
DEPARTMENT OF TRANSPORTATION

E HARRISON AVENUE (WEST LEG)
CROSS SECTIONS

SCALE: 1" = 5' | SHEET 13 OF 58 SHEETS | STA. 802+25.00 TO STA. 802+25.00

F.A.U. RTE.	SECTION	COUNTY	TOTAL SHEETS	SHEET NO.
7448	09-00933-01-BR	MACON	996	909

CONTRACT NO. 6WGY(165)

ILLINOIS | FED. AID PROJECT

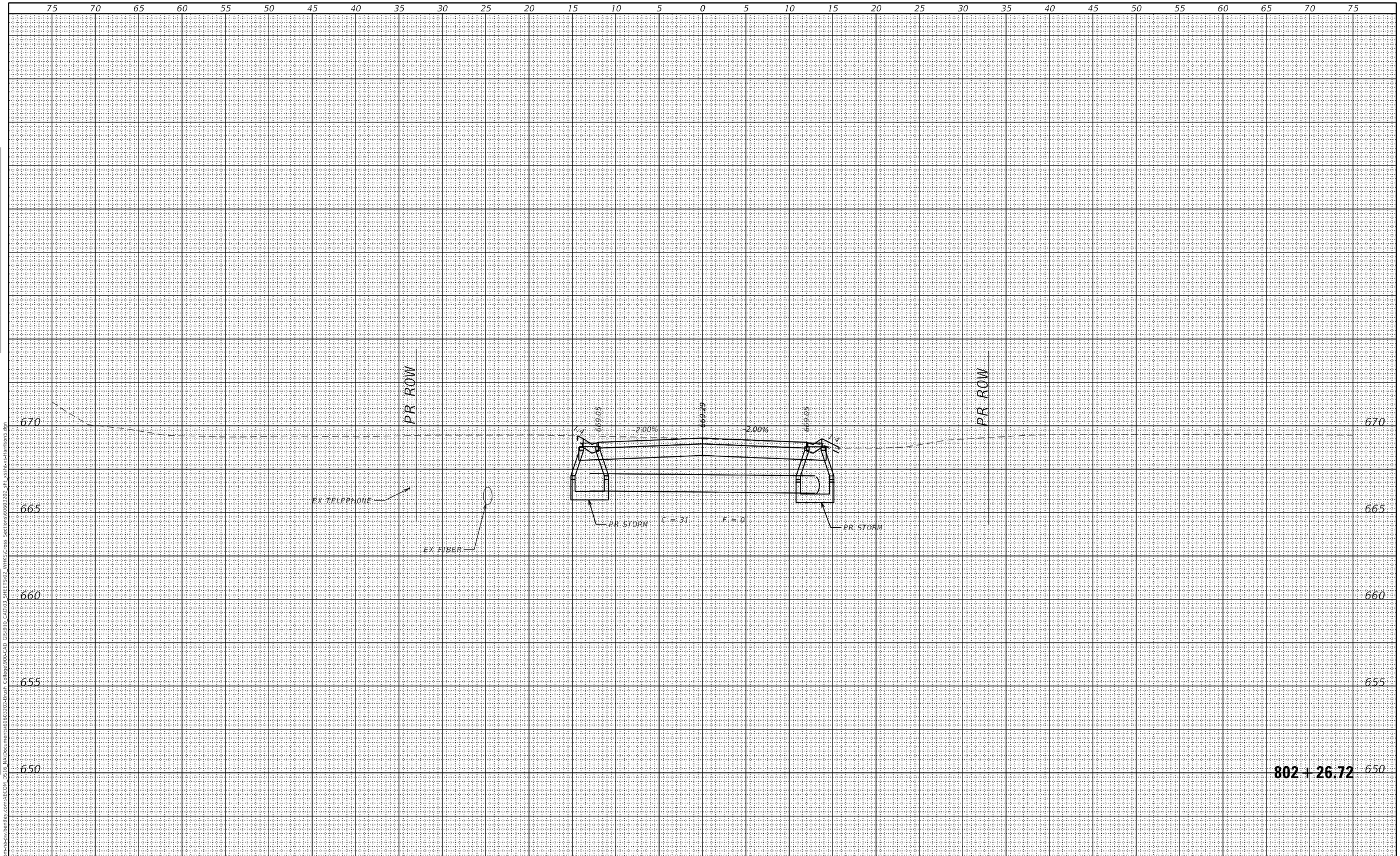

FINAL SURVEY		BY	DATE
	SURVEYED		
	PLOTTED		
NOTE BOOK	TEMPLATE		
	AREAS		
	AREAS CHECKED		
NO.			

ORIGINAL SURVEY		BY	DATE
	SURVEYED		
	PLOTTED		
NOTE BOOK	TEMPLATE		
	AREAS		
	AREAS CHECKED		
NO.			

MODEL: Default
FILE NAME: pw:\\aecom-na-pw.bentley.com:AECOM DS16 NA\Documents\60603202-Brush College90b-CAD GIS\910 CAD\03 SHEETS\02 VHKS\Cross Sections\60603202 sht xssh-xs-harrison5.dgn

design firm no. 184001036
whks
engineers + planners + land surveyors

USER NAME = $OPERATOR$	DESIGNED - -	REVISED
	CHECKED - -	REVISED
PLOT SCALE = 10.0000 ' / in.	DRAWN - -	REVISED
PLOT DATE = 10/30/2020	CHECKED - -	REVISED

STATE OF ILLINOIS
DEPARTMENT OF TRANSPORTATION

E HARRISON AVENUE (WEST LEG)
CROSS SECTIONS

SCALE: 1" = 5' | SHEET 14 OF 58 SHEETS | STA. 802+26.72 TO STA. 802+26.72

F.A.U. RTE.	SECTION	COUNTY	TOTAL SHEETS	SHEET NO.
7448	09-00933-01-BR	MACON	996	910

CONTRACT NO. 6WGY(165)

ILLINOIS | FED. AID PROJECT

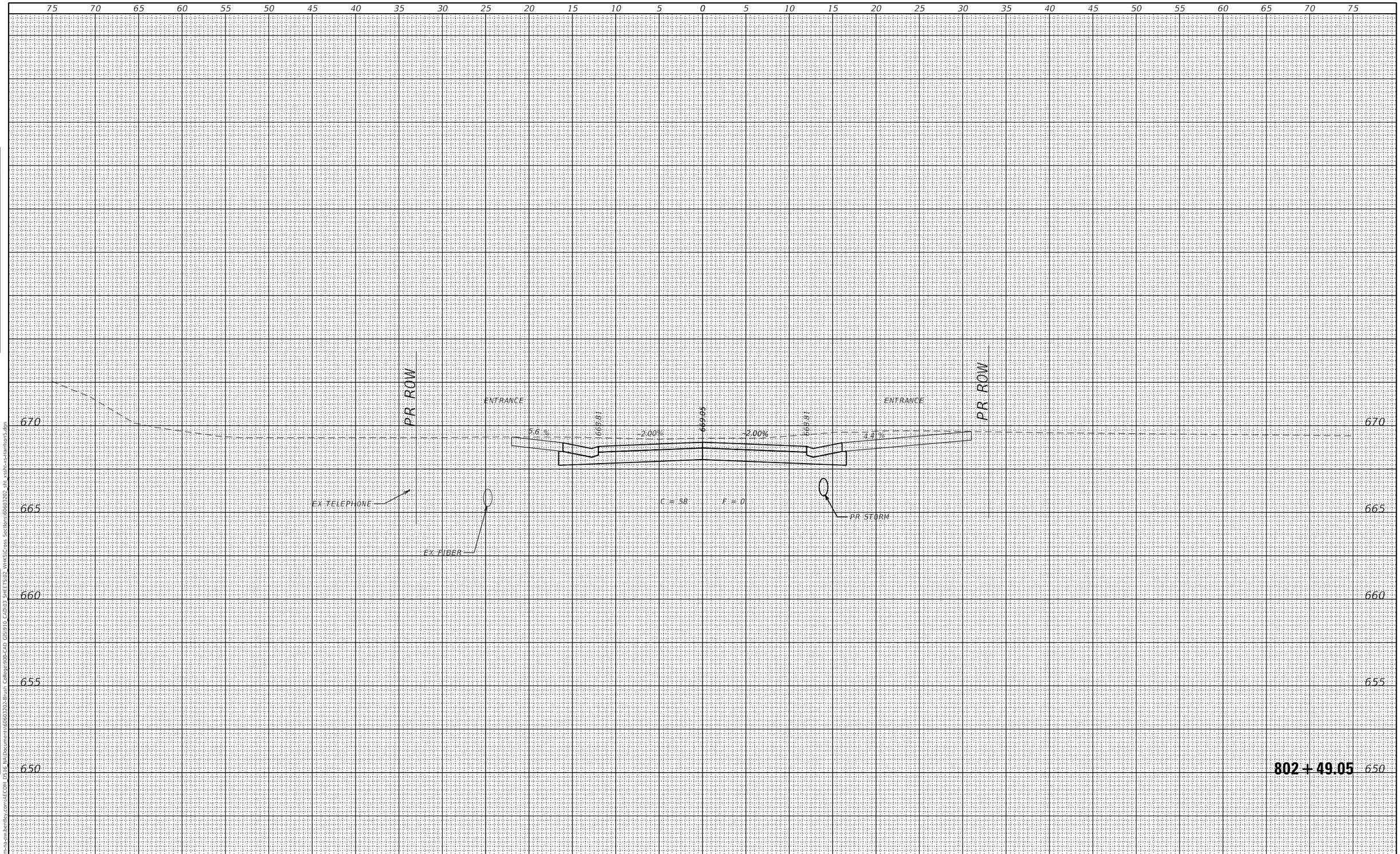

FINAL SURVEY		BY	DATE
NOTE BOOK	SURVEYED		
	PLOTTED		
	TEMPLATE		
	AREAS		
NO.	AREAS CHECKED		

ORIGINAL SURVEY		BY	DATE
NOTE BOOK	SURVEYED		
	PLOTTED		
	TEMPLATE		
	AREAS		
NO.	AREAS CHECKED		

MODEL: Default
FILE NAME: pw:\\aecom-na-sw.bentley.com:AECOM DS16 NA\Documents\60603202-Brush College90b-CAD GIS\910 CAD\03 SHEETS\02 VHKS\Cross Sections\60603202 sht xssht-xs-harrison5.dgn

design firm no. 184001036
whks
engineers + planners + land surveyors

USER NAME = $OPERATOR$	DESIGNED - -	REVISED
	CHECKED - -	REVISED
PLOT SCALE = 10.0000 ' / in.	DRAWN - -	REVISED
PLOT DATE = 10/30/2020	CHECKED - -	REVISED

STATE OF ILLINOIS
DEPARTMENT OF TRANSPORTATION

E HARRISON AVENUE (WEST LEG)
CROSS SECTIONS

SCALE: 1" = 5' | SHEET 15 OF 58 SHEETS | STA. 802+49.05 TO STA. 802+49.05

F.A.U. RTE.	SECTION	COUNTY	TOTAL SHEETS	SHEET NO.
7448	09-00933-01-BR	MACON	996	911

CONTRACT NO. 6WGY(165)

ILLINOIS | FED. AID PROJECT

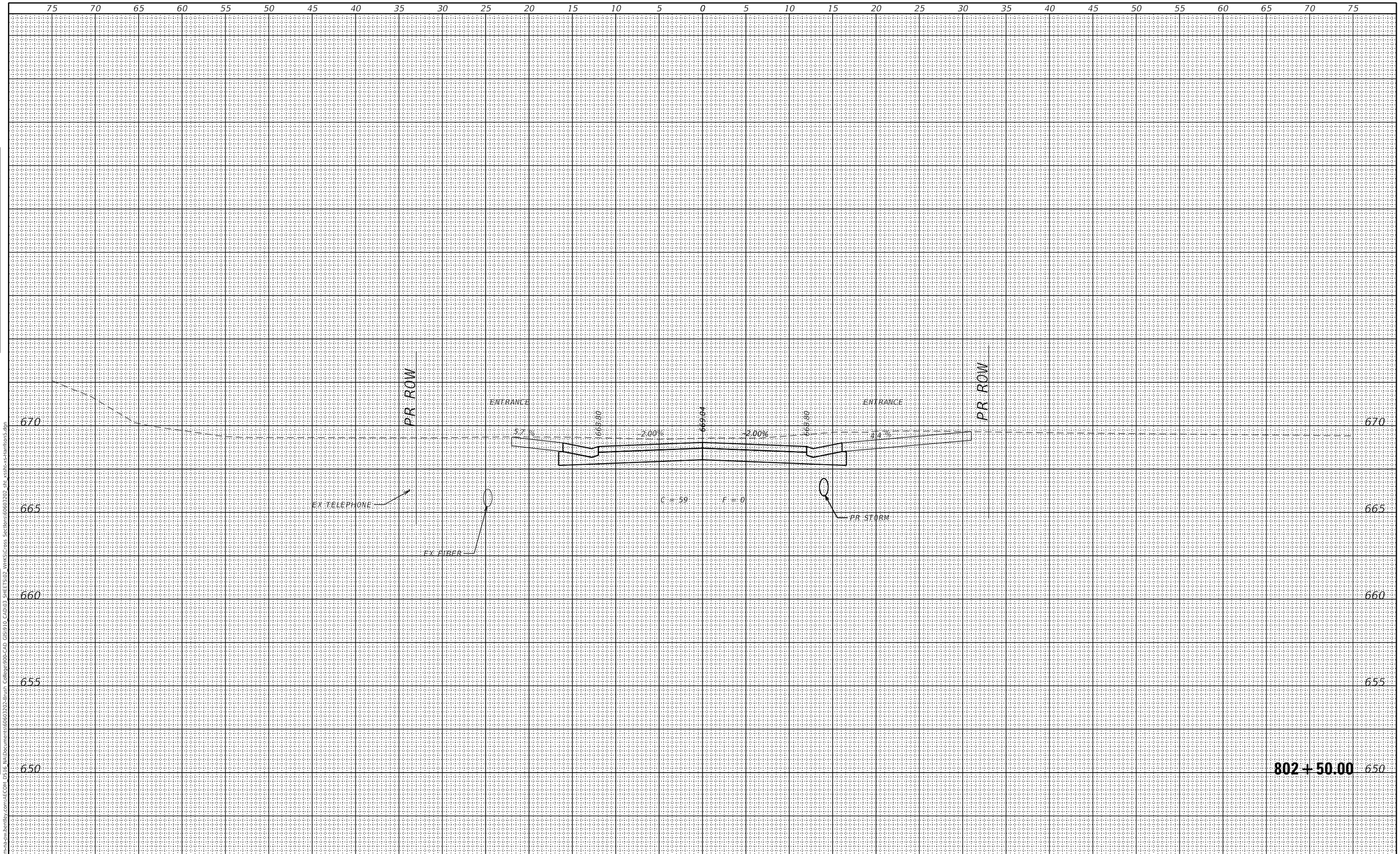

FINAL SURVEY		BY	DATE
	SURVEYED		
	PLOTTED		
NOTE BOOK	TEMPLATE		
	AREAS		
NO.	AREAS CHECKED		

ORIGINAL SURVEY		BY	DATE
	SURVEYED		
	PLOTTED		
NOTE BOOK	TEMPLATE		
	AREAS		
NO.	AREAS CHECKED		

MODEL: Default
FILE NAME: pw:\\aecom-na-sw.bentley.com:AECOM DS16 NA\Documents\60603202-Brush College\90b-CAD GIS\910 CAD\03 SHEETS\02 VHKS\Cross Sections\60603202 sht xssht-xs-harrison5.dgn

design firm no. 184001036
whks
engineers + planners + land surveyors

USER NAME = $OPERATOR$	DESIGNED - -	REVISED	
	CHECKED - -	REVISED	
PLOT SCALE = 10.0000 ' / in.	DRAWN - -	REVISED	
PLOT DATE = 10/30/2020	CHECKED - -	REVISED	

STATE OF ILLINOIS
DEPARTMENT OF TRANSPORTATION

E HARRISON AVENUE (WEST LEG)
CROSS SECTIONS

SCALE: 1" = 5' | SHEET 16 OF 58 SHEETS | STA. 802+50.00 TO STA. 802+50.00

F.A.U. RTE.	SECTION	COUNTY	TOTAL SHEETS	SHEET NO.
7448	09-00933-01-BR	MACON	996	912

CONTRACT NO. 6WGY(165)

ILLINOIS | FED. AID PROJECT

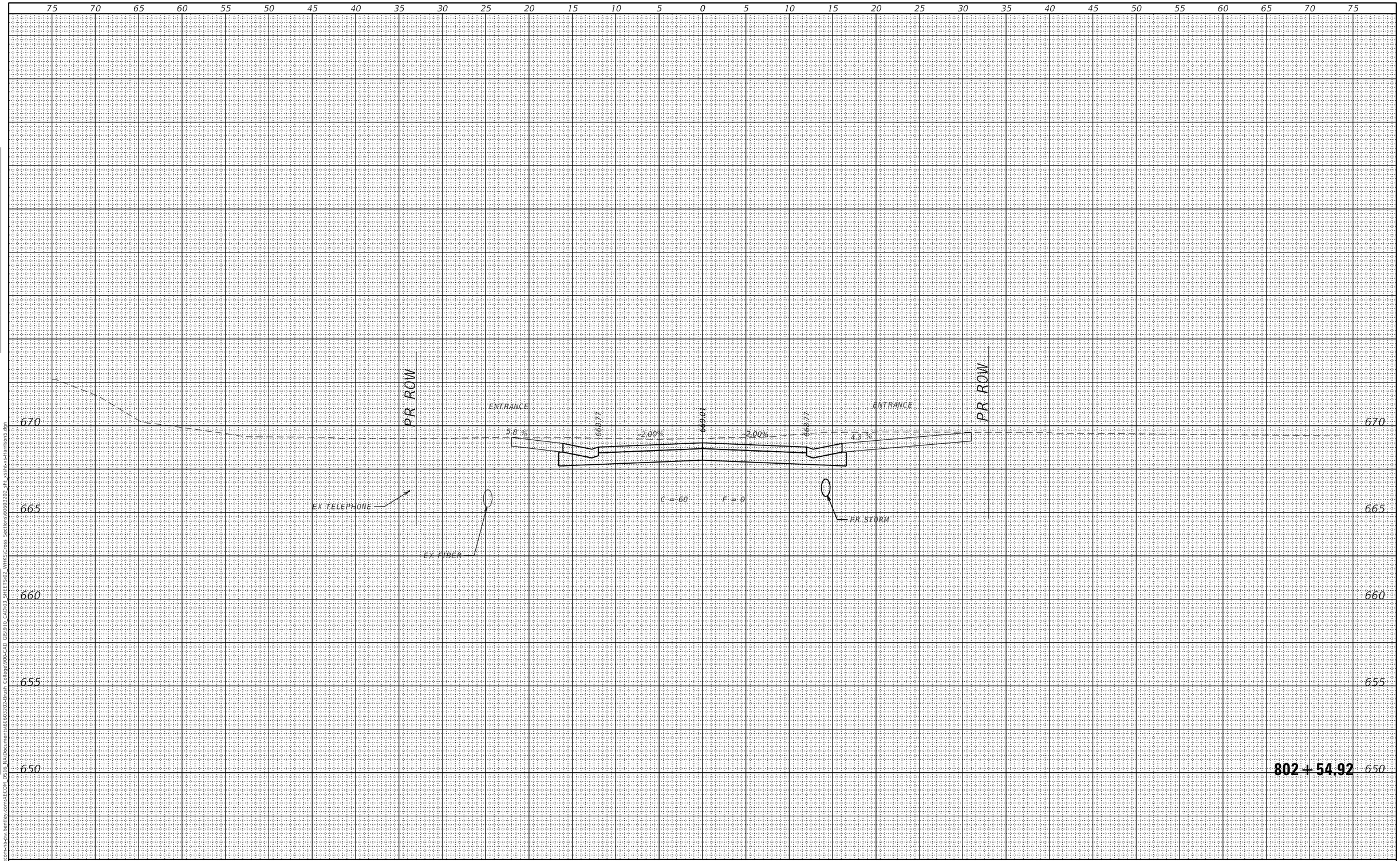

FINAL SURVEY		BY	DATE
NOTE BOOK	SURVEYED		
	PLOTTED		
	TEMPLATE		
	AREAS		
NO.	AREAS CHECKED		

ORIGINAL SURVEY		BY	DATE
NOTE BOOK	SURVEYED		
	PLOTTED		
	TEMPLATE		
	AREAS		
NO.	AREAS CHECKED		

MODEL: Default
FILE NAME: pw:\\aecom-na-pw.bentley.com:AECOM DS16 NA\Documents\60603202-Brush College90b-CAD GIS\910 CAD\03 SHEETS\02 VHKS\Cross Sections\60603202 sht xssht-xs-harrison5.dgn

design firm no. 184001036
whks
engineers • planners • land surveyors

USER NAME = $OPERATOR$	DESIGNED - -	REVISED
	CHECKED - -	REVISED
PLOT SCALE = 10.0000 ' / in.	DRAWN - -	REVISED
PLOT DATE = 10/30/2020	CHECKED - -	REVISED

STATE OF ILLINOIS
DEPARTMENT OF TRANSPORTATION

E HARRISON AVENUE (WEST LEG)
CROSS SECTIONS

SCALE: 1" = 5' | SHEET 17 OF 58 SHEETS | STA. 802+54.92 TO STA. 802+54.92

F.A.U. RTE.	SECTION	COUNTY	TOTAL SHEETS	SHEET NO.
7448	09-00933-01-BR	MACON	996	913

CONTRACT NO. 6WGY(165)

ILLINOIS | FED. AID PROJECT

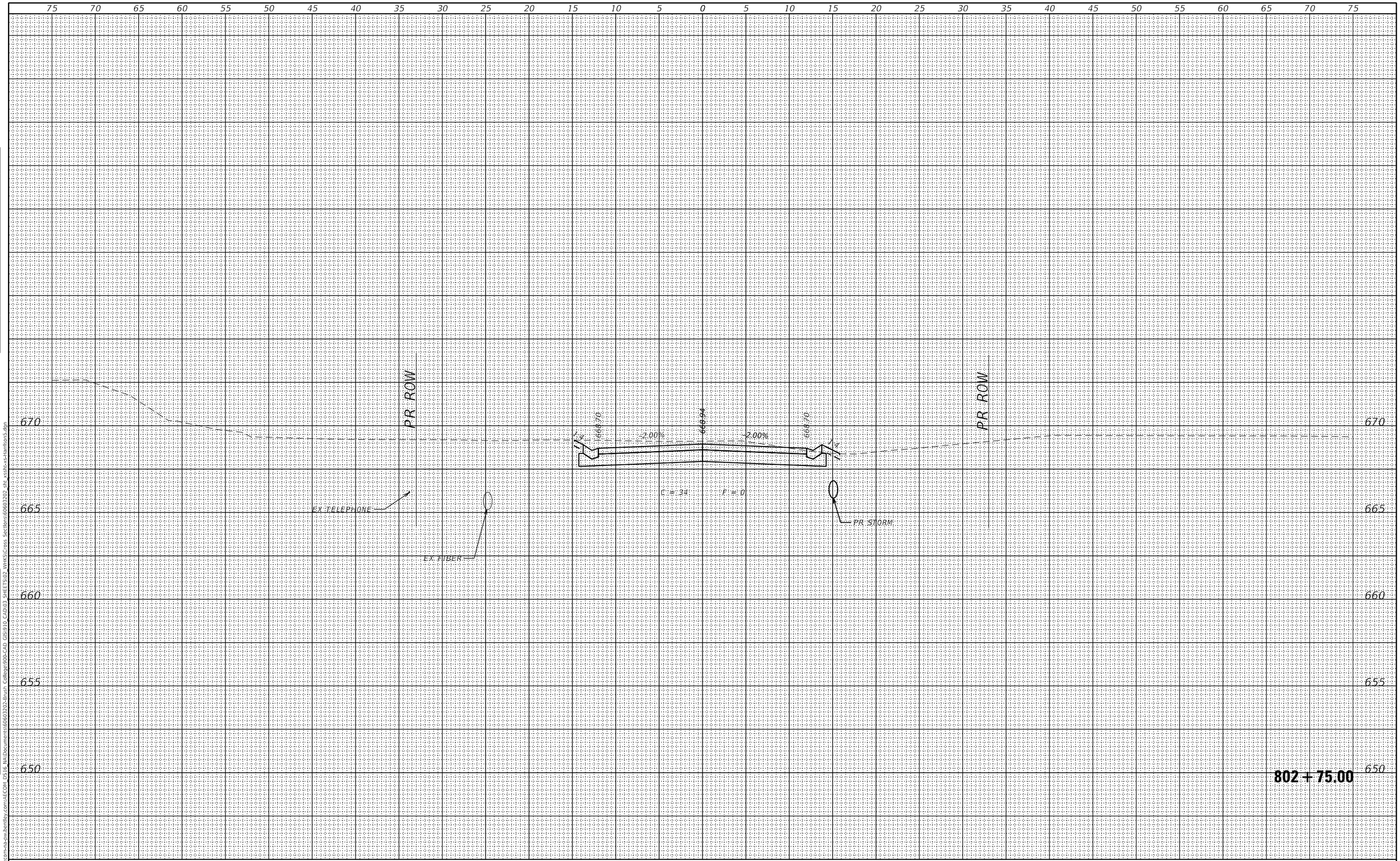

FINAL SURVEY		BY	DATE
NOTE BOOK	SURVEYED		
	PLOTTED		
	TEMPLATE		
	AREAS		
	AREAS 2		
NO.	AREAS CHECKED		

ORIGINAL SURVEY		BY	DATE
NOTE BOOK	SURVEYED		
	PLOTTED		
	TEMPLATE		
	AREAS		
	AREAS 2		
NO.	AREAS CHECKED		

MODEL: Default
FILE NAME: pw:\\aecom-na-pw.bentley.com:AECOM DS16 NA\Documents\60603202-Brush College\90b-CAD GIS\910 CAD\03 SHEETS\02 VHKS\Cross Sections\60603202 sht xssht-xs-Harrison5.dgn

design firm no. 184001036
whks
engineers + planners + land surveyors

USER NAME = $OPERATOR$	DESIGNED - -	REVISED	
	CHECKED - -	REVISED	
PLOT SCALE = 10.0000 ' / in.	DRAWN - -	REVISED	
PLOT DATE = 10/30/2020	CHECKED - -	REVISED	

STATE OF ILLINOIS
DEPARTMENT OF TRANSPORTATION

E HARRISON AVENUE (WEST LEG)
CROSS SECTIONS

SCALE: 1" = 5' | SHEET 18 OF 58 SHEETS | STA. 802+75.00 TO STA. 802+75.00

F.A.U. RTE.	SECTION	COUNTY	TOTAL SHEETS	SHEET NO.
7448	09-00933-01-BR	MACON	996	914

CONTRACT NO. 6WGY(165)

ILLINOIS | FED. AID PROJECT

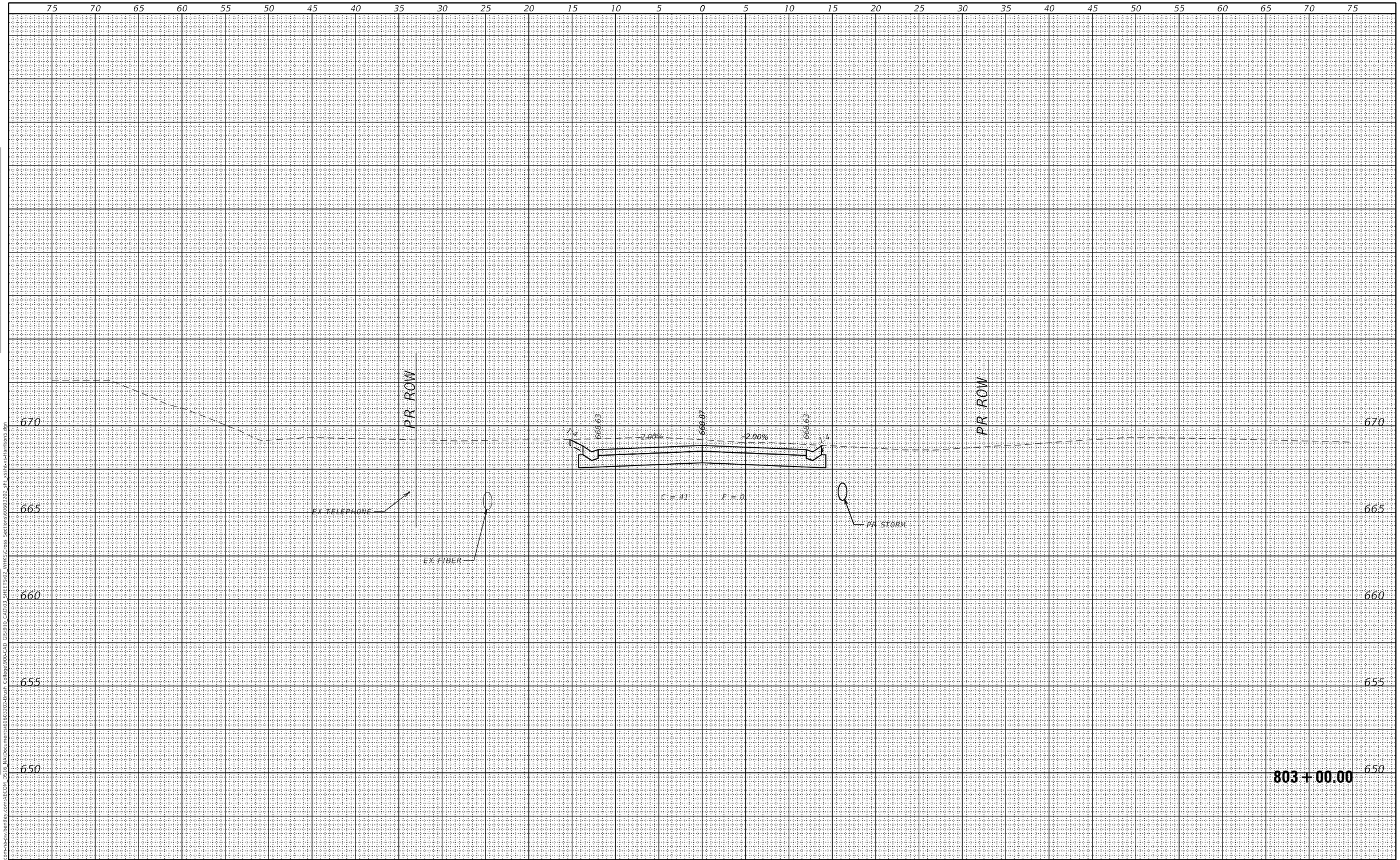

FINAL SURVEY		BY	DATE
NOTE BOOK	SURVEYED		
	PLOTTED		
	TEMPLATE		
	AREAS		
	AREAS CHECKED		

ORIGINAL SURVEY		BY	DATE
NOTE BOOK	SURVEYED		
	PLOTTED		
	TEMPLATE		
	AREAS		
	AREAS CHECKED		

NODEL: Default
FILE NAME: pw:\\aecom-na-pw.bentley.com:AECOM DS16 NA\Documents\60603202-Brush College\900-CAD GIS\910 CAD\03 SHEETS\02 VHKS\Cross Sections\60603202 sht xsshc-xs-Harrison5.dgn

design firm no. 184001036
whks
engineers + planners + land surveyors

USER NAME = $OPERATOR$	DESIGNED - -	REVISED	
	CHECKED - -	REVISED	
PLOT SCALE = 10.0000 ' / in.	DRAWN - -	REVISED	
PLOT DATE = 10/30/2020	CHECKED - -	REVISED	

STATE OF ILLINOIS
DEPARTMENT OF TRANSPORTATION

E HARRISON AVENUE (WEST LEG)
CROSS SECTIONS

SCALE: 1" = 5' | SHEET 19 OF 58 SHEETS | STA. 803+00.00 TO STA. 803+00.00

F.A.U. RTE.	SECTION	COUNTY	TOTAL SHEETS	SHEET NO.
7448	09-00933-01-BR	MACON	996	915

CONTRACT NO. 6WGY(165)

ILLINOIS | FED. AID PROJECT

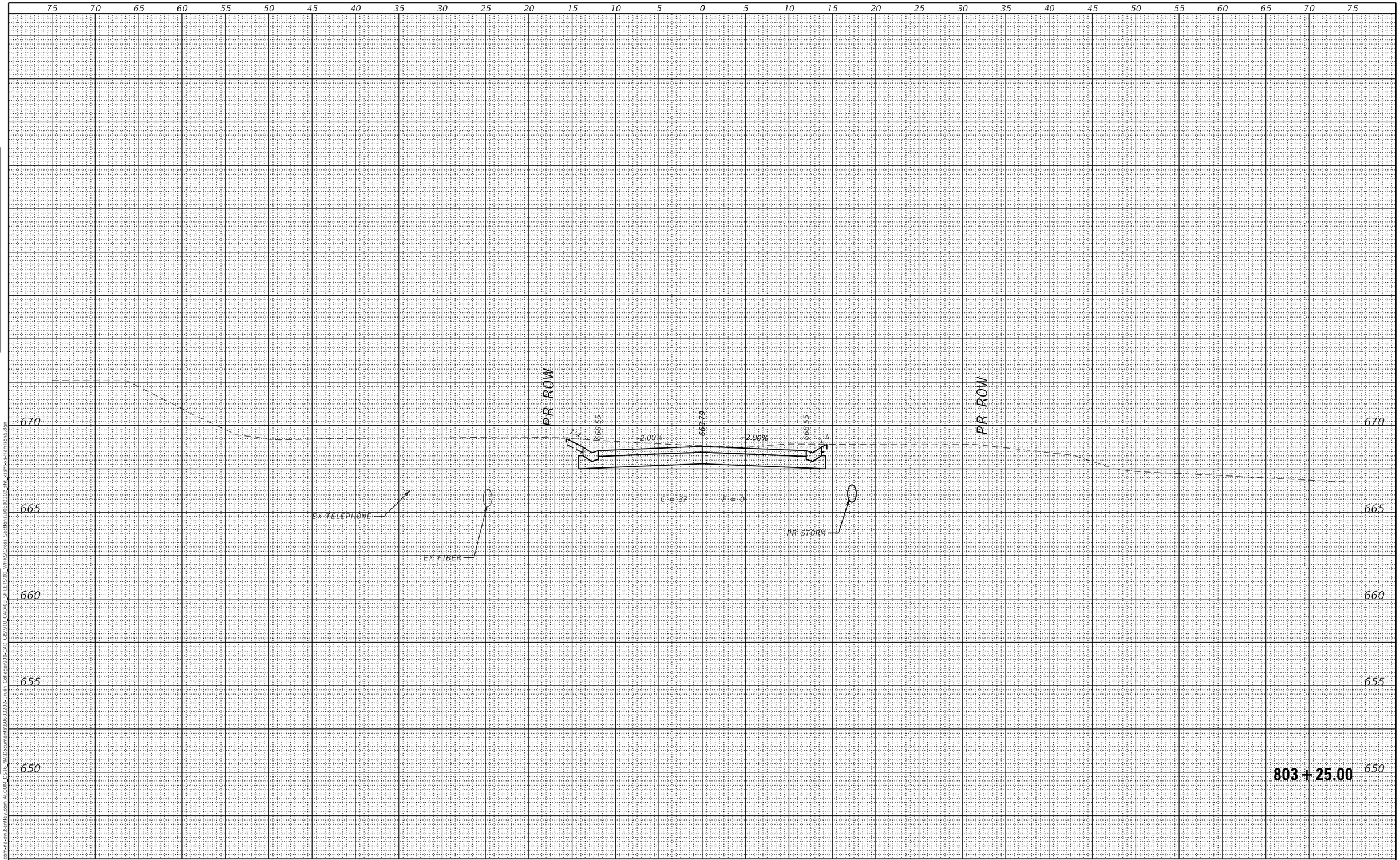

FINAL SURVEY		BY	DATE
NOTE BOOK	SURVEYED		
	PLOTTED		
	TEMPLATE		
	AREAS		
NO.	AREAS CHECKED		

ORIGINAL SURVEY		BY	DATE
NOTE BOOK	SURVEYED		
	PLOTTED		
	TEMPLATE		
	AREAS		
NO.	AREAS CHECKED		

MODEL: Default
FILE NAME: pw:\\aecom-na-pw.bentley.com:AECOM DS16 NA\Documents\60603202-Brush College\900-CAD GIS\910 CAD\03 SHEETS\02 WHKS\Cross Sections\60603202_sht_xssln-xs-lanlion5.dgn

design firm no. 184001036
whks
engineers + planners + land surveyors

USER NAME = $OPERATOR$	DESIGNED - -	REVISED	
	CHECKED - -	REVISED	
PLOT SCALE = 10.0000 ' / in.	DRAWN - -	REVISED	
PLOT DATE = 10/30/2020	CHECKED - -	REVISED	

STATE OF ILLINOIS
DEPARTMENT OF TRANSPORTATION

E HARRISON AVENUE (WEST LEG)
CROSS SECTIONS

SCALE: 1" = 5' | SHEET 20 OF 58 SHEETS | STA. 803+25.00 TO STA. 803+25.00

F.A.U. RTE.	SECTION	COUNTY	TOTAL SHEETS	SHEET NO.
7448	09-00933-01-BR	MACON	996	916

CONTRACT NO. 6WGY(165)

ILLINOIS | FED. AID PROJECT

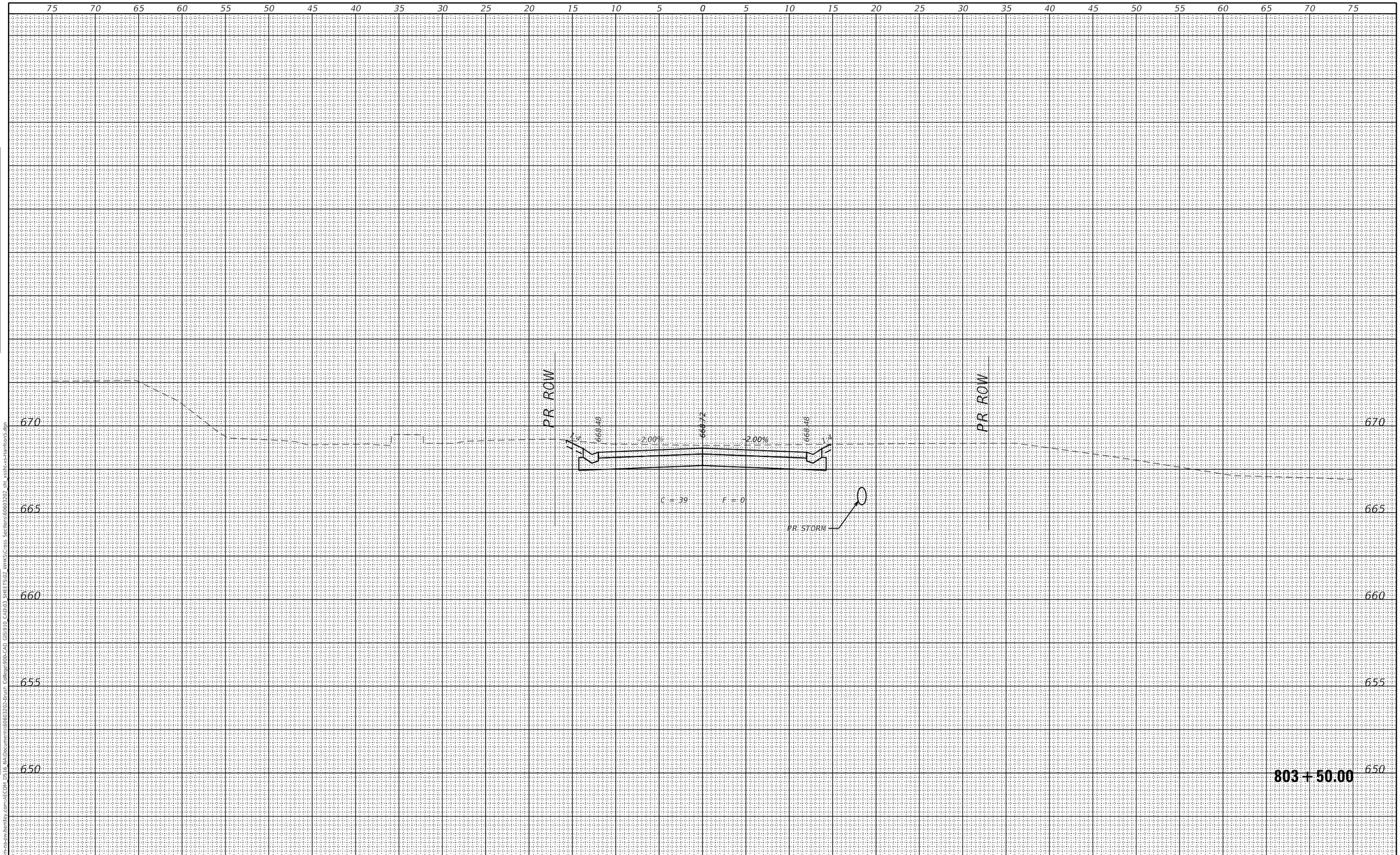

FINAL SURVEY		BY	DATE
	SURVEYED		
	PLOTTED		
NOTE BOOK	TEMPLATE		
	AREAS		
NO.	AREAS CHECKED		

ORIGINAL SURVEY		BY	DATE
	SURVEYED		
	PLOTTED		
NOTE BOOK	TEMPLATE		
	AREAS		
NO.	AREAS CHECKED		

MODEL: Default
FILE NAME: pw:\\aecom-na-pw.bentley.com:AECOM DS16 NA\Documents\60603202-Brush College\900-CAD GIS\910 CAD\03 SHEETS\02 WHKS\Cross Sections\60603202_sht_xssln-xs-harrison5.dgn

design firm no. 184001036
whks
engineers + planners + land surveyors

USER NAME = $OPERATOR$	DESIGNED - -	REVISED	
	CHECKED - -	REVISED	
PLOT SCALE = 10.0000 ' / in.	DRAWN - -	REVISED	
PLOT DATE = 10/30/2020	CHECKED - -	REVISED	

STATE OF ILLINOIS
DEPARTMENT OF TRANSPORTATION

E HARRISON AVENUE (WEST LEG)
CROSS SECTIONS

SCALE: 1" = 5' | SHEET 21 OF 58 SHEETS | STA. 803+50.00 TO STA. 803+50.00

F.A.U. RTE.	SECTION	COUNTY	TOTAL SHEETS	SHEET NO.
7448	09-00933-01-BR	MACON	996	917

CONTRACT NO. 6WGY(165)
ILLINOIS | FED. AID PROJECT

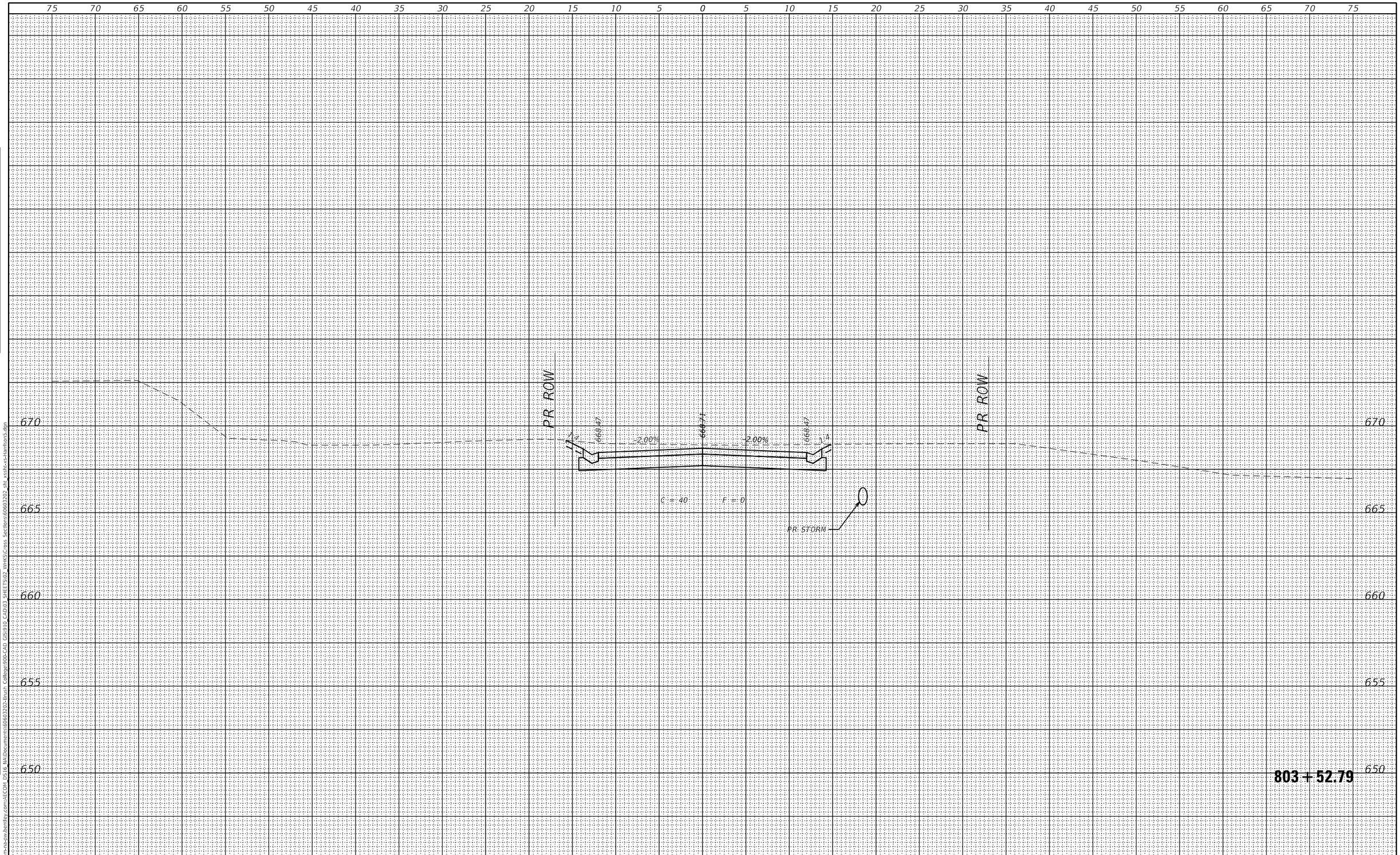

FINAL SURVEY		BY	DATE
	SURVEYED		
	PLOTTED		
NOTE BOOK	TEMPLATE		
	AREAS		
NO.	AREAS CHECKED		

ORIGINAL SURVEY		BY	DATE
	SURVEYED		
	PLOTTED		
NOTE BOOK	TEMPLATE		
	AREAS		
NO.	AREAS CHECKED		

MODEL: Default
FILE NAME: pw:\\aecom-na-pw.bentley.com:AECOM DS16 NA\Documents\60603202-Brush College\900-CAD GIS\910 CAD\03 SHEETS\02 WHKS\Cross Sections\60603202_sht_xssln-xs-harrison5.dgn

design firm no. 184001036
whks
engineers + planners + land surveyors

USER NAME = $OPERATOR$	DESIGNED - -	REVISED	
	CHECKED - -	REVISED	
PLOT SCALE = 10.0000 ' / in.	DRAWN - -	REVISED	
PLOT DATE = 10/30/2020	CHECKED - -	REVISED	

STATE OF ILLINOIS
DEPARTMENT OF TRANSPORTATION

E HARRISON AVENUE (WEST LEG)
CROSS SECTIONS

SCALE: 1" = 5' | SHEET 22 OF 58 SHEETS | STA. 803+52.79 TO STA. 803+52.79

F.A.U. RTE.	SECTION	COUNTY	TOTAL SHEETS	SHEET NO.
7448	09-00933-01-BR	MACON	996	918

CONTRACT NO. 6WGY(165)

ILLINOIS | FED. AID PROJECT