F.A.U. RTE.	SECTION	COUNTY	TOTAL SHEETS	SHEET NO.
7448	09-00933-01-BR	MACON	996	519
		ILLINOIS	CONTRACT NO. XXXXX	

FOR INDEX OF SHEETS AND STANDARDS SEE SHEET NO. 2

STATE OF ILLINOIS

DEPARTMENT OF TRANSPORTATION

VOLUME II

DESIGN DESIGNATIONS:

BRUSH COLLEGE ROAD (FAU 7448)	21,000 (2035) MINOR ARTERIAL	35 /40 MPH
FARIES PARKWAY (FAU 7369) (WEST LEG)	12,000 (2035) MINOR ARTERIAL	35 /40 MPH
FARIES PARKWAY (FAU 7369) (EAST LEG)	15,000 (2035) COLLECTOR	35 /40 MPH
CONNECTOR ROAD	18,000 (2035) COLLECTOR	30 /30 MPH

POSTED /DESIGN SPEEDS:

PLANS FOR PROPOSED LOCAL AGENCY IMPROVEMENT

FAU ROUTE 7448 (BRUSH COLLEGE ROAD) OVER FARIES PARKWAY GRADE SEPARATION

SECTION 09–00933–01–BR

PROJECT 3ELT(222)

BRIDGE STRUCTURE, RETAINING WALLS, ROADWAY RECONSTRUCTION, LIGHTING, AND TRAFFIC SIGNALS

MACON COUNTY

C–97–106–21

W. BRENT SEARS 062-067068 LICENSED PROFESSIONAL ENGINEER OF ILLINOIS

W. BRENT SEARS, P.E. DATE
LICENSE EXPIRES 11 /30 /2021
SHEET RANGE:

CORY W. CHAMBERLAIN 062-055298 LICENSED PROFESSIONAL ENGINEER STATE OF ILLINOIS

CORY W. CHAMBERLAIN, P.E. DATE
LICENSE EXPIRES 11 /30 /2021
SHEET RANGE:

STATE OF ILLINOIS DEMIR DABEZIC 081-007749 LICENSED STRUCTURAL ENGINEER

DEMIR DEBEZIC, S.E. DATE
LICENSE EXPIRES 11 /30 /2022
SHEET RANGE:

STATE OF ILLINOIS SCOTT D. SANFORD 081-005468 SPRINGFIELD LICENSED STRUCTURAL ENGINEER

SCOTT D. SANFORD, S.E. DATE
LICENSE EXPIRES 11 /30 /2022
SHEET RANGE:

MATTHEW J. LETOURNEAU 062-055763 LICENSED PROFESSIONAL ENGINEER OF ILLINOIS

MATTHEW J. LETOURNEAU, P.E. DATE
LICENSE EXPIRES 11 /30 /2021
SHEET RANGE:

KEITH W. BENTING STATE OF ILLINOIS 4777 DECATUR, ILLINOIS LICENSED STRUCTURAL ENGINEER

KEITH W. BENTING, S.E. DATE
LICENSE EXPIRES 11 /30 /2022
SHEET RANGE:

WILLIAM D. STERMER 062-060936 LICENSED PROFESSIONAL ENGINEER STATE OF ILLINOIS

WILLIAM D. STERMER, P.E. DATE
LICENSE EXPIRES 11 /30 /2021
SHEET RANGE:

LICENSED PROFESSIONAL ENGINEER LANCE D. CHRISMAN NO. 062-056127 STATE OF ILLINOIS

LANCE D. CHRISMAN, P.E. DATE
LICENSE EXPIRES 11 /30 /2021
SHEET RANGE:

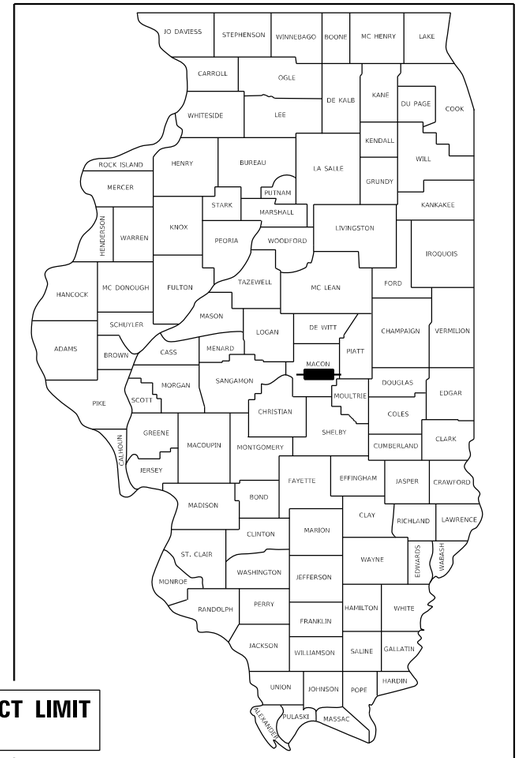

LOCATION OF SECTION INDICATED THUS:–

BRUSH COLLEGE RD PROJECT LIMIT
END STA 75 + 44.21

FARIES PKWY PROJECT LIMIT
END STA 235 + 41.47

FARIES PKWY PROJECT LIMIT
BEGIN STA 205 + 18.73

BRUSH COLLEGE STRUCTURE LIMIT
STA 60 + 10.96 TO STA 62 + 76.19
SN 058–9202

BRUSH COLLEGE RD PROJECT LIMIT
BEGIN STA 46 + 59.43

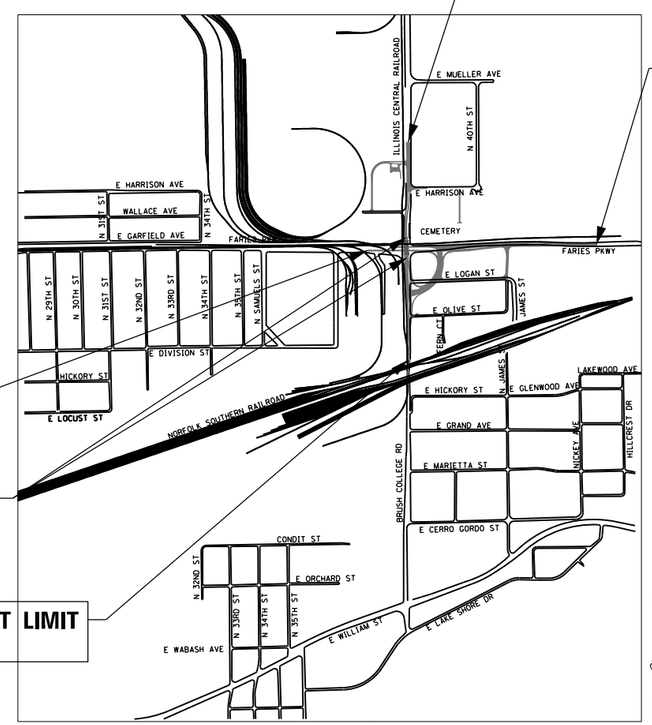

LOCATION MAP
NOT TO SCALE

GROSS LENGTH = 5,855.36 FT (1.11 MILES)
NET LENGTH = 5,855.36 FT (1.11 MILES)

AECOM
345 EAST ASH AVE, SUITE B
DECATUR, IL 62526
PHONE: (217) 775-6065

QUIGG ENGINEERING INC
2351 S. DIRKSEN PARKWAY
SPRINGFIELD, IL 62703
PHONE: (217) 670-0563

design firm no. 184001036
whks
engineers + planners + land surveyors
3695 6TH STREET FRONTAGE ROAD WEST, SUITE A
SPRINGFIELD, IL 62703
PHONE: (217) 483-9457

Kaskaskia Engineering Group, LLC
PROFESSIONAL REGISTRATIONS — LICENSE NO.
Illinois Professional Design Firm — 184.001773
Professional Engineering Group — 20-3088386
208 E. MAIN STREET, SUITE 100
BELLEVILLE, IL 62220
PHONE: (618) 233-5877
FAX: (618) 233-5977

100′ 200′ 300′ — 1″= 100′
10′ 20′ 30′ — 1″= 10′
50′ 100′ — 1″= 50′
50′ 100′ — 1″= 40′
50′ 100′ — 1″= 30′
50′ 100′ — 1″= 20′

FULL SIZE PLANS HAVE BEEN PREPARED USING STANDARD ENGINEERING SCALES. REDUCED SIZED PLANS WILL NOT CONFORM TO STANDARD SCALES. IN MAKING MEASUREMENTS ON REDUCED PLANS, THE ABOVE SCALES MAY BE USED.

J.U.L.I.E.
JOINT UTILITY LOCATION INFORMATION FOR EXCAVATION
1–800–892–0123
OR 811

PRELIMINARY
NOT FOR CONSTRUCTION

APPROVED _____ 20 _____
CITY ENGINEER

PASSED _____ 20 _____
DISTRICT SEVEN ENGINEER OF LOCAL ROADS & STREETS

RELEASING FOR BID BASED ON LIMITED REVIEW _____ 20 _____
REGION FOUR ENGINEER

STATE OF ILLINOIS
DEPARTMENT OF TRANSPORTATION

CONTRACT NO. XXXXX

Benchmark: "M" in Mueller on fire hydrant at Southeast corner of Cerro Gordo St. and Brush College Rd. – Elev. 652.58.

Existing Structure: None

Traffic Control: The existing Brush College Road shall be closed and traffic will be detoured during construction.

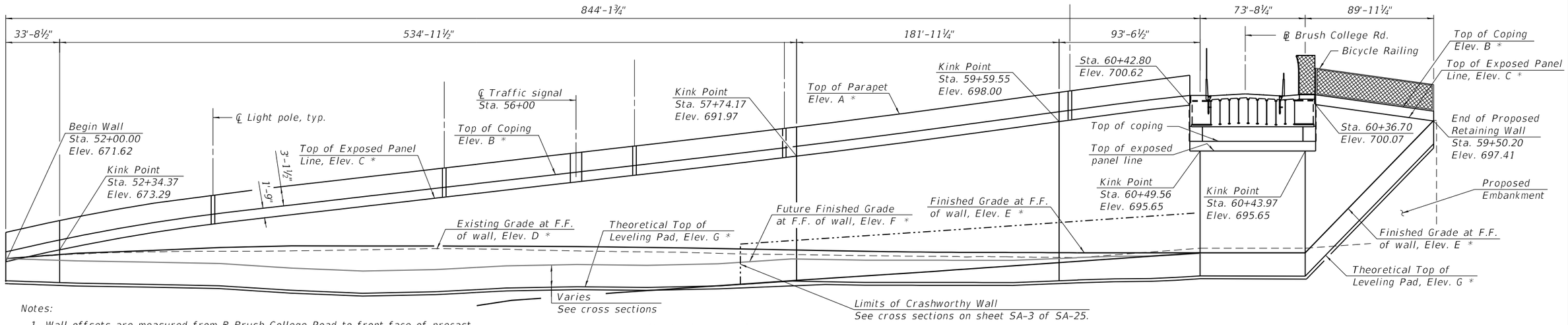

Notes:

1. Wall offsets are measured from ℄ Brush College Road to front face of precast modular units. Horizontal dimensions are measured along F.F. of wall units.
2. F.F. denotes Front Face.
3. B.F. denotes Back Face.

UNFOLDED ELEVATION

(Projected View – F.F. of Wall)

* For Elevations, see Wall Elevations Table on sheet SA-03 of SA-25.

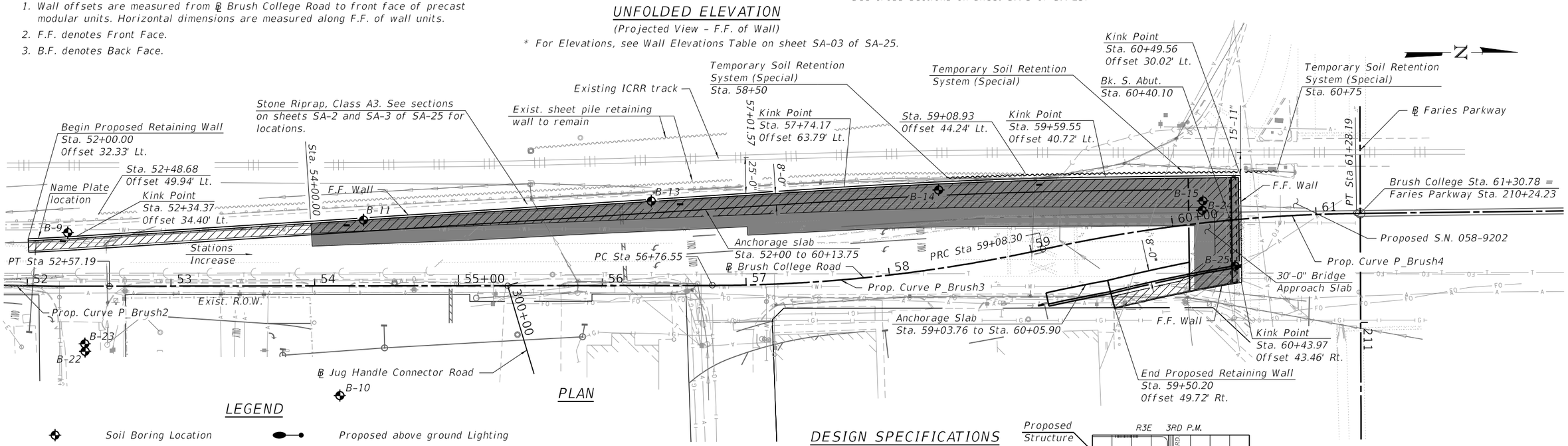

PLAN

LEGEND

Soil Boring Location	Proposed above ground Lighting
Existing Aerial	Proposed above ground Inlet
Existing Electric	Proposed traffic signal
Existing Fiber Optic	Approximate Limits of Precast Modular Retaining Wall Mass
Existing Gas	Approximate Limits of Lightweight Concrete Cellular Fill
Existing Sanitary Sewer	
Existing Storm Sewer	
Existing underground Telephone	
Existing Water	

DESIGN SPECIFICATIONS

2020 AASHTO LRFD Bridge
Design Specifications, 9th Edition

DESIGN STRESSES

FIELD UNITS

f'c = 3,500 psi
fy = 60,000 psi (Reinforcement)
f'c = 4,000 psi (Superstructure)

PRECAST UNITS

f'c = 4,500 psi
Allowable Bearing Pressure =

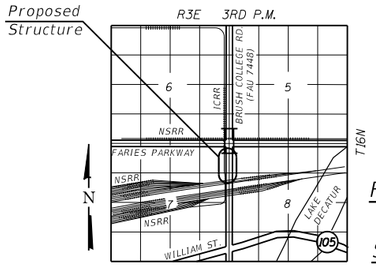

LOCATION SKETCH

GENERAL PLAN & ELEVATION
BRUSH COLLEGE ROAD
F.A.U. 7448 – SECTION 09-00933-01-BR
MACON COUNTY
STA. 52+00.00 LT TO STA. 59+50.20 RT
STRUCTURE NO. 058-W003

LAST SAVED DATE S-DATSAVEDDATES

FILE NAME: L:\Jobs\AECOM\68270 Brush College Road\CADD\Cad3\Sheets\60603202_SN058W003.dgn

design firm no. 184001036 — whks engineers + planners + land surveyors	USER NAME = dheberling	DESIGNED - SDS	REVISED	STATE OF ILLINOIS DEPARTMENT OF TRANSPORTATION
	FILE NAME = 60603202_SN058W003.dgn	CHECKED - CWC	REVISED	
	PLOT SCALE = 0.17' / in.	DRAWN - DLH	REVISED	
	PLOT DATE = 10/30/2020	CHECKED - SDS	REVISED	

SHEET NO. SA-01 OF SA-25 SHEETS

F.A.U. RTE.	SECTION	COUNTY	TOTAL SHEETS	SHEET NO.
7448	09-00933-01-BR	MACON	996	520

CONTRACT NO. 6WGY(165)

ILLINOIS FED. AID PROJECT

GENERAL NOTES

1. Reinforcement bars designated (E) shall be epoxy coated.
2. Protective Coat shall be applied to the top and interior surfaces of the parapets and the top exposed surface of the Anchorage Slabs.
3. The Contractor shall field verify the location of all underground utilities. The contractor shall take precautions to protect existing underground utilities that are to remain in service during construction of the wall. Any damage to underground utilities will be the responsibility of the Contractor. For locations and elevations of utilities, see Utility Plans.
4. The Contractor may encounter abandoned utilities or drainage structures that obstruct construction of the proposed wall. Removal and disposal of portions of these obstructions shall not be cause for additional payment but shall be included in the cost of "Precast Modular Retaining Wall". For locations and elevations of utilities, see Utility Plans.
5. All Lightweight Cellular Concrete Fill shall be Class II. See Special Provisions.
6. The Contractor shall coordinate the construction of the proposed wall with the construction of the proposed bridge over Faries Parkway (S.N. 058-9202). See MOT plan sheets and special provisions.
7. For details and quantity of conduits embedded in structure, see Electrical Plans.

TOTAL BILL OF MATERIAL

ITEM	UNIT	Super	Sub	TOTAL
Portland Cement Concrete Sidewalk, 5 inch	Cu. Yd.	540		540
Removal of Existing Structures	Each	1		1
Structure Excavation	Cu. Yd.		3140	3140
Concrete Structures	Cu. Yd.		330.0	330.0
Concrete Superstructure	Cu. Yd.	539.1		539.1
Protective Coat	Sq. Yd.	1306		1306
Reinforcement Bars, Epoxy Coated	Pound	70770		70770
Bicycle Railing	Foot	55		55
Parapet Railing	Foot	100		100
Name Plates	Each	1		1
Precast Modular Retaining Wall	Sq. Ft.		21207	21207
Lightweight Cellular Concrete Fill	Cu. Yd.		19947	19947
Temporary Soil Retention System (Special)	Sq. Ft.		1200	1200
Pipe Underdrains for Structures 4"	Foot		652	652

INDEX OF SHEETS

SA-01. General Plan and Elevation
SA-02. General Data
SA-03. Wall Cross Sections and Details 1
SA-04. Wall Cross Sections and Details 2
SA-05. Temporary Soil Retention System (Special) Details
SA-06. West Parapet and Anchorage Slab Plan and Elevation 1
SA-07. West Parapet and Anchorage Slab Plan and Elevation 2
SA-08. West Parapet and Anchorage Slab Plan and Elevation 3
SA-09. West Parapet and Anchorage Slab Plan and Elevation 4
SA-10. West Parapet and Anchorage Slab Plan and Elevation 5
SA-11. West Parapet and Anchorage Slab Plan and Elevation 6
SA-12. West Parapet and Anchorage Slab Plan and Elevation 7
SA-13. West Parapet and Anchorage Slab Plan and Elevation 8
SA-14. West Parapet and Anchorage Slab Plan and Elevation 9
SA-15. East Parapet and Anchorage Slab Plan and Elevation
SA-16.-SA-17. Parapet and Anchorage Slab Details
SA-18. Bicycle Railing
SA-19. Existing Sheet Pile Retaining Wall Plans
SA-20.-SA-25. Borings

STATION 52+00.00 TO 60+42.80
BUILT BY
STATE OF ILLINOIS
F.A.U. RT. 7448
SECTION 09-00933-01-BR
LOADING HL-93
STRUCTURE NO. 058-W003

NAME PLATE

See Std. 515001

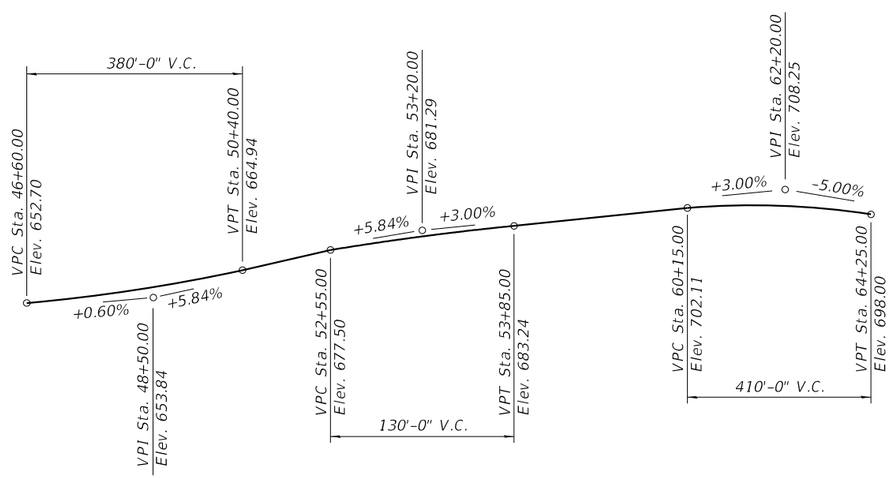

PROFILE GRADE

(Along ℄ Brush College Road)

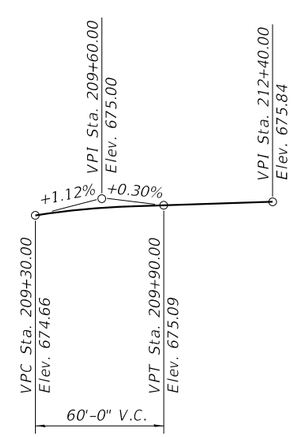

PROFILE GRADE

(Along ℄ Faries Parkway)

PROP. CURVE P_BRUSH2

BRUSH COLLEGE RD.

PI STA. = 51+91.51
Δ = 3° 00' 41" (LT)
D = 2° 17' 31"
R = 2,500.00'
T = 65.72'
L = 131.40'
E = 0.86'
e = NC
T.R. = N/A
S.E. RUN = N/A
P.C. STA. = 51+25.79
P.T. STA. = 52+57.19

PROP. CURVE P_BRUSH3

BRUSH COLLEGE RD.

PI STA. = 57+92.87
Δ = 12° 17' 41" (LT)
D = 5° 18' 19"
R = 1,080.00'
T = 116.32'
L = 231.75'
E = 6.25'
e = NC
T.R. = N/A
S.E. RUN = N/A
P.C. STA. = 56+76.55
P.T. STA. = 59+08.30

PROP. CURVE P_BRUSH4

BRUSH COLLEGE RD.

PI STA. = 60+18.63
Δ = 11° 39' 57" (RT)
D = 5° 18' 19"
R = 1,080.00'
T = 110.33'
L = 219.89'
E = 5.62'
e = NC
T.R. = N/A
S.E. RUN = N/A
P.C. STA. = 59+08.30
P.T. STA. = 61+28.19

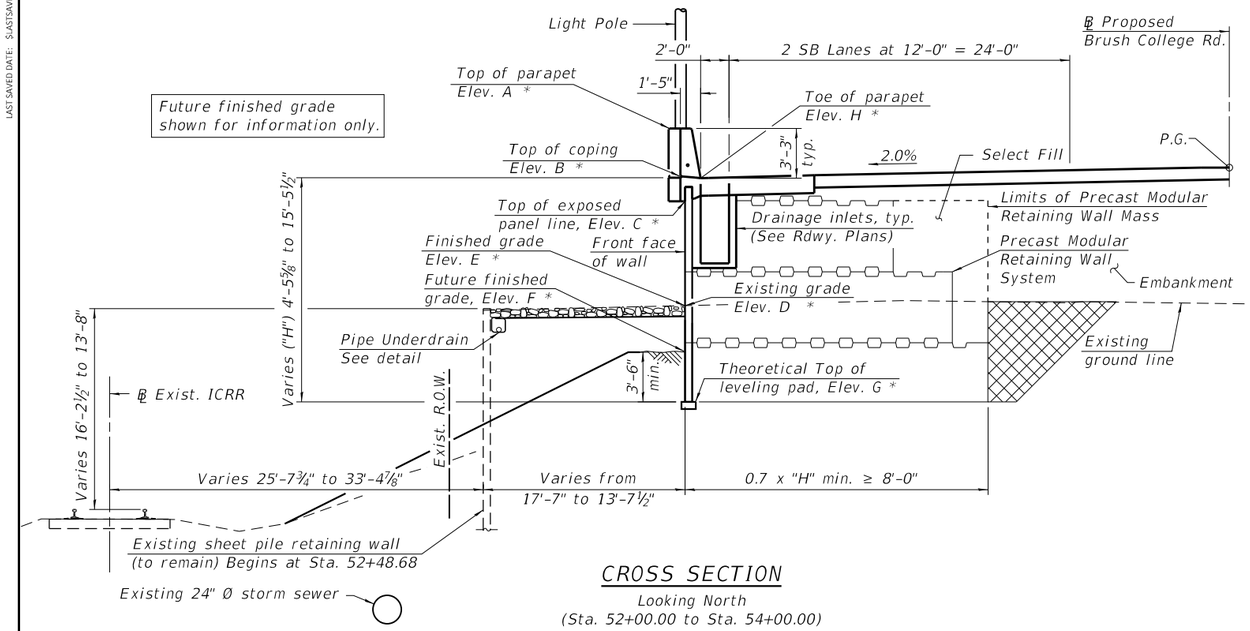

CROSS SECTION

Looking North
(Sta. 52+00.00 to Sta. 54+00.00)

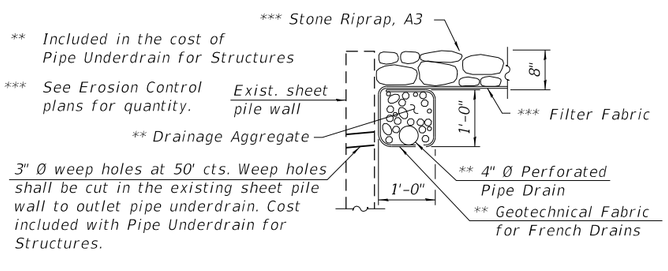

PIPE UNDERDRAIN FOR STRUCTURES DETAIL

(Install Pipe Underdrain for Structures at location shown for entire length of Existing Sheet Pile Retaining Wall.)

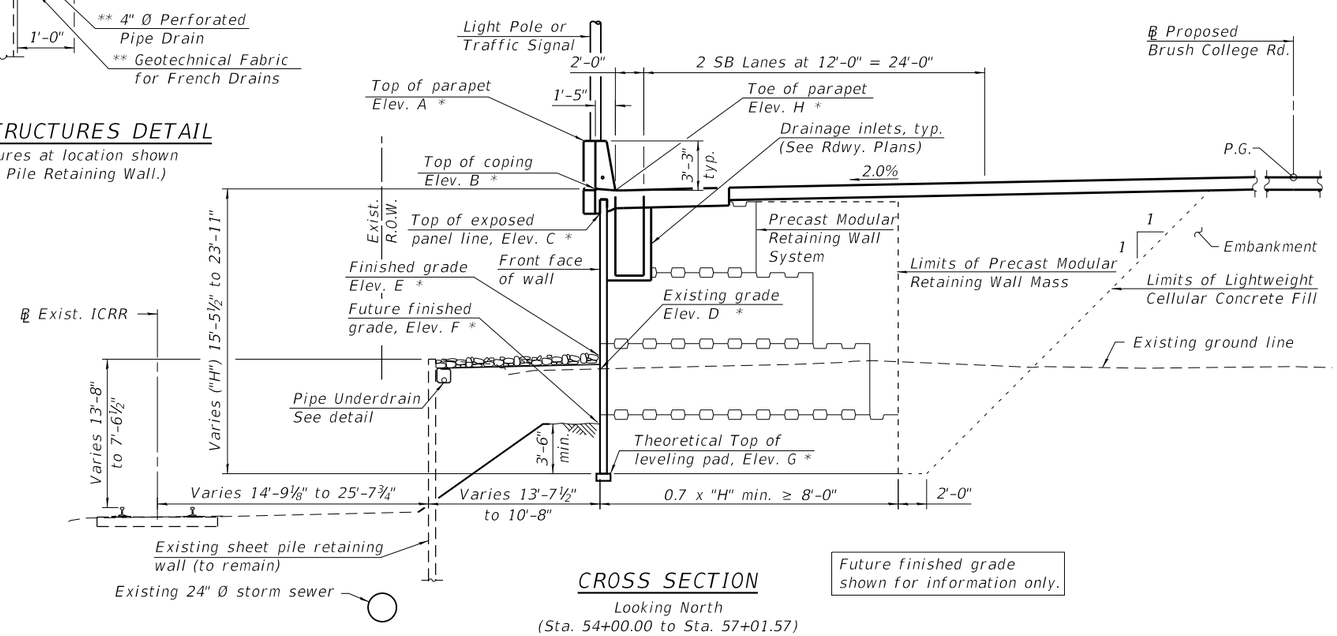

CROSS SECTION

Looking North
(Sta. 54+00.00 to Sta. 57+01.57)

Future finished grade
shown for information only.

WALL ELEVATIONS

Station	Offset	Elevation A	Elevation B	Elevation C	Elevation D	Elevation E	Elevation F	Elevation G	Elevation H
52+00.00	32.33' Lt.	676.49	673.37	671.62	672.90	672.90	672.90	668.90	673.24
52+34.37	34.40' Lt.	678.16	675.04	673.29	673.52	673.87	673.09	669.09	674.91
52+50.00	35.38' Lt.	678.92	675.80	674.05	673.72	674.32	673.18	669.18	675.67
53+00.00	38.52' Lt.	681.35	678.23	676.48	674.10	674.53	672.56	668.56	678.10
53+50.00	41.66' Lt.	683.74	680.62	678.87	674.21	674.67	672.24	668.24	680.49
54+00.00	44.80' Lt.	685.79	682.67	680.92	674.30	674.86	671.21	667.21	682.54
54+50.00	47.95' Lt.	687.43	684.31	682.56	674.48	675.06	670.36	666.36	684.18
55+00.00	51.09' Lt.	688.87	685.75	684.00	674.69	675.32	670.39	666.39	685.62
55+50.00	54.23' Lt.	690.31	687.19	685.44	674.58	675.29	671.19	667.19	687.06
56+00.00	57.37' Lt.	691.75	688.63	686.88	674.28	674.99	671.25	667.25	688.50
56+50.00	60.51' Lt.	693.18	690.06	688.31	674.10	674.71	671.26	667.26	689.93
57+00.00	63.32' Lt.	694.63	691.51	689.76	673.84	674.44	671.60	667.60	691.38
57+50.00	64.17' Lt.	696.11	692.99	691.24	673.63	674.27	672.30	668.30	692.86
57+74.17	63.79' Lt.	696.84	693.72	691.97	673.53	674.19	672.52	668.52	693.59
58+00.00	62.74' Lt.	697.64	694.52	692.77	673.44	674.10	672.74	668.74	694.39
58+50.00	58.56' Lt.	699.22	696.10	694.35	673.31	673.76	672.36	668.36	695.97
59+00.00	51.47' Lt.	700.86	697.74	695.99	673.23	673.79	671.96	667.96	697.61
59+50.00	42.31' Lt.	702.55	699.43	697.68	673.07	673.42	673.29	669.29	699.30
59+59.55	40.72' Lt.	702.87	699.75	698.00	673.10	673.44	–	669.44	699.62
60+00.00	34.93' Lt.	704.20	701.08	699.33	673.32	673.70	–	669.70	700.95
60+42.80	30.55' Lt.	705.49	702.37	700.62	673.70	674.38	–	670.38	702.24
60+49.56	30.02' Lt.	–	697.40	695.65	674.26	674.26	–	670.26	–
60+43.97 –	43.46' Rt.	–	697.40	695.65	673.92	673.92	–	669.92	–
60+43.97 +	43.46' Rt.	–	697.40	695.65	673.92	673.92	–	670.42	–
60+36.70	43.95' Rt.	–	701.82	700.07	673.70	681.47	–	677.97	–
60+25.00	44.73' Rt.	–	701.49	699.74	673.52	683.92	–	680.42	–
60+00.00	46.40' Rt.	–	700.72	698.97	673.22	689.14	–	685.64	–
59+75.00	48.07' Rt.	–	699.93	698.18	673.31	694.36	–	690.86	–
59+50.20	49.72 Rt.	–	699.16	697.41	675.64	697.41	–	693.91	–

Elevation A – Top of Parapet
Elevation B – Top of Coping
Elevation C – Top of Exposed Panel Line
Elevation D – Existing Grade at F.F. of wall
Elevation E – Finished Grade at F.F. of wall
Elevation F – Future Finished Grade at F.F. of wall (For information only)
Elevation G – Theoretical Top of Leveling Pad
Elevation H – Toe of Parapet

LEGEND

Over excavation beyond the limits of Structure Excavation. This area not measured for payment. Area to be back-filled with the same material as used for Select Fill or Lightweight Cellular Concrete Fill.

Note:

1. The Precast Modular Retaining Wall supplier's internal stability design shall account for anchorage slab's bearing pressure surcharge of 1.0 ksf and horizontal sliding force of 0.67 kips/ft. of wall.

* For Elevations, see Wall Elevations Table above.

LAST SAVED DATE: 5/ASTSAVEDDATES

FILE NAME: L:\Jobs\AECOM\58670 Brush College Road\CADD\CADD Sheets\60603202_SN058W003.dgn

design firm no. 184001036 whks engineers • planners • land surveyors

USER NAME = dheberling	DESIGNED - SDS	REVISED	
FILE NAME = 60603202_SN058W003.dgn	CHECKED - CWC	REVISED	
PLOT SCALE = 0.17' / in.	DRAWN - DLH	REVISED	
PLOT DATE = 10/30/2020	CHECKED - SDS	REVISED	

STATE OF ILLINOIS
DEPARTMENT OF TRANSPORTATION

WALL CROSS SECTIONS AND DETAILS 1
STRUCTURE NO. 058-W003

SHEET NO. SA-03 OF SA-25 SHEETS

F.A.U. RTE.	SECTION	COUNTY	TOTAL SHEETS	SHEET NO.
7448	09-00933-01-BR	MACON	996	522

CONTRACT NO. 6WGY(165)

ILLINOIS FED. AID PROJECT

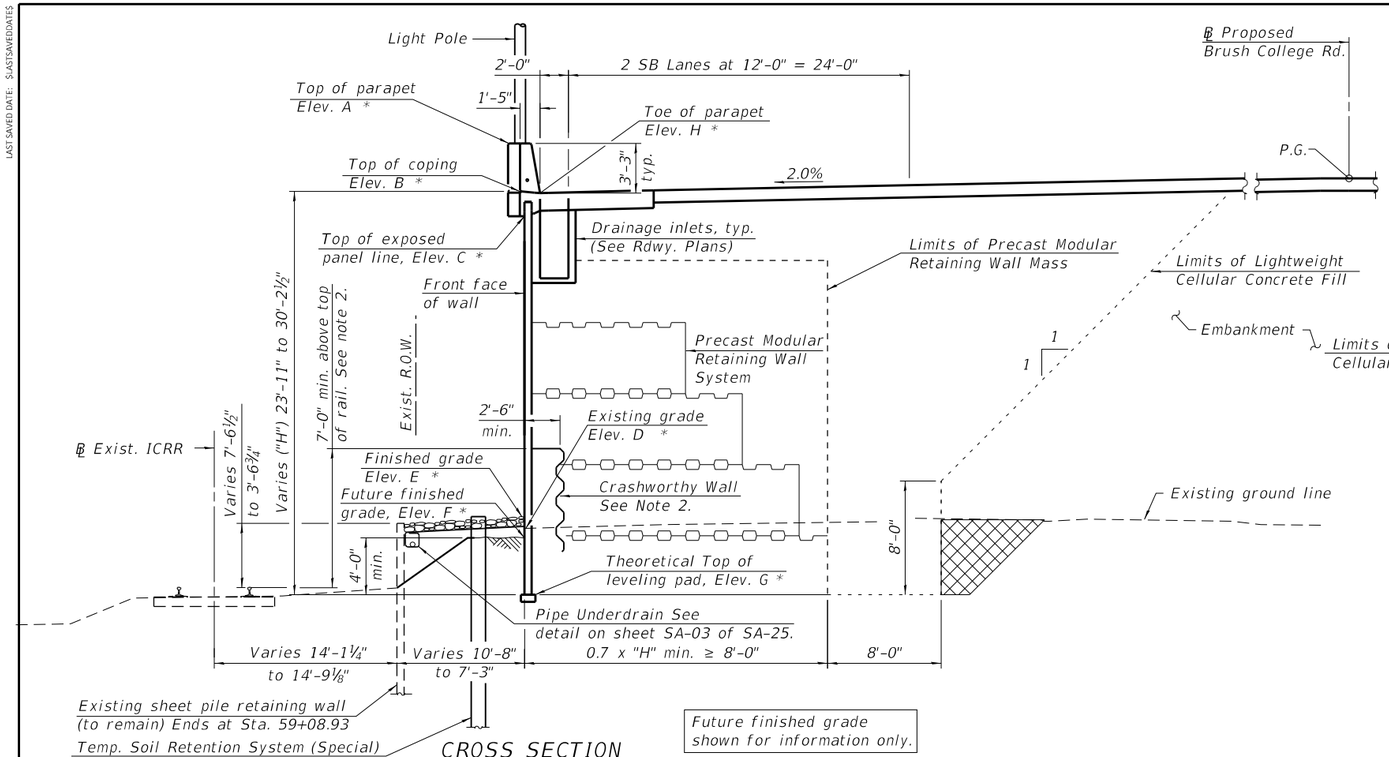

CROSS SECTION

Looking North
(Sta. 57+01.57 to Sta. 59+50.20)

Future finished grade shown for information only.

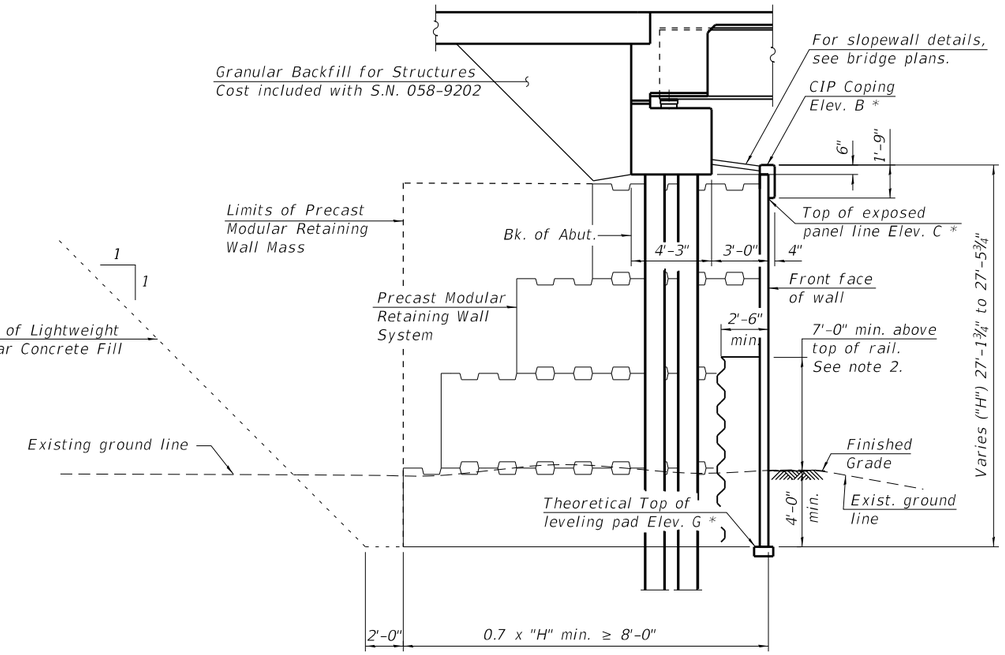

CROSS SECTION MSE WALL AT ABUTMENT

Looking West

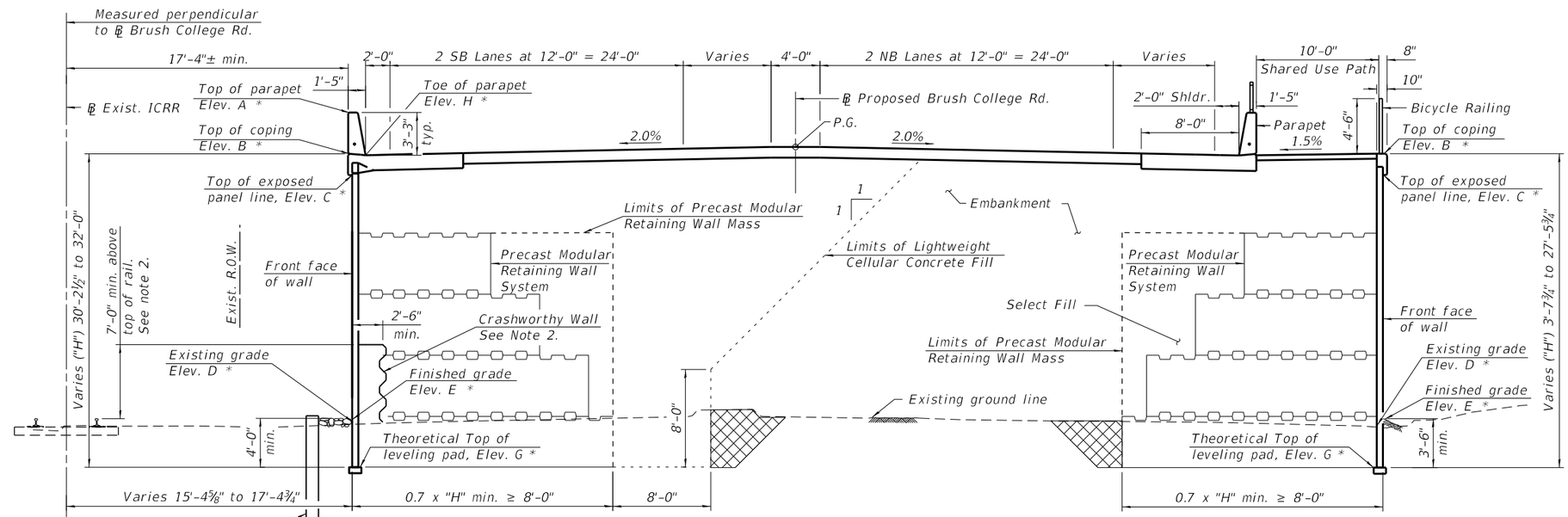

CROSS SECTION

Looking North
(Sta. 59+50.20 to Sta. 60+49.56)

LEGEND

Over excavation beyond the limits of Structure Excavation. This area not measured for payment. Area to be back-filled with the same material as used for Select Fill or Lightweight Cellular Concrete Fill.

Note:

1. The Precast Modular Retaining Wall supplier's internal stability design shall account for anchorage slab's bearing pressure surcharge of 1.0 ksf and horizontal sliding force of 0.67 kips/ft. of wall.
2. Retaining wall shall be Crashworthy per 2020 Manual for Railway Engineering a min. of 7'-0" above top of rail for wall within 25' of the ℄ existing rail from Sta. 57+01.57 Rt. to Sta. 60+49.56 Rt., see cross sections. Cost of crashworthy concrete mass paid for as Concrete Structures.

* For Elevations, see Wall Elevations Table on sheet SA-03.

LAST SAVED DATE: S:\ASTSAVED\DATES

FILE NAME: L:\Jobs\AECOM\08770 Brush College Road\CADD\CADD Sheets\60603202_SN058W003.dgn

design firm no. 184001036

whks engineers • planners • land surveyors

USER NAME = dheberling	DESIGNED - SDS	REVISED	
FILE NAME = 60603202_SN058W003.dgn	CHECKED - CWC	REVISED	
PLOT SCALE = 0.17' / in.	DRAWN - DLH	REVISED	
PLOT DATE = 10/30/2020	CHECKED - SDS	REVISED	

STATE OF ILLINOIS
DEPARTMENT OF TRANSPORTATION

WALL CROSS SECTIONS AND DETAILS 2
STRUCTURE NO. 058-W003

SHEET NO. SA-04 OF SA-25 SHEETS

F.A.U. RTE.	SECTION	COUNTY	TOTAL SHEETS	SHEET NO.
7448	09-00933-01-BR	MACON	996	523
		CONTRACT NO. 6WGY(165)		
		ILLINOIS FED. AID PROJECT		

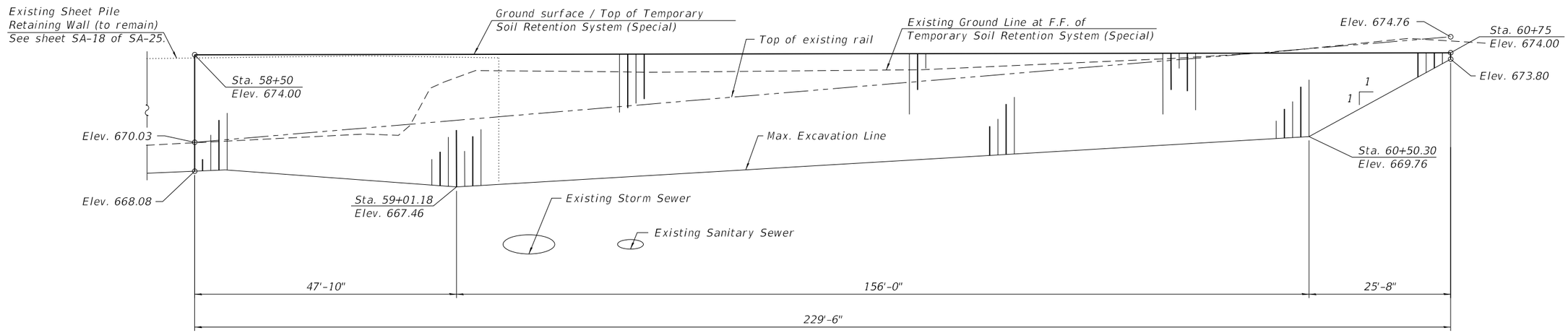

ELEVATION

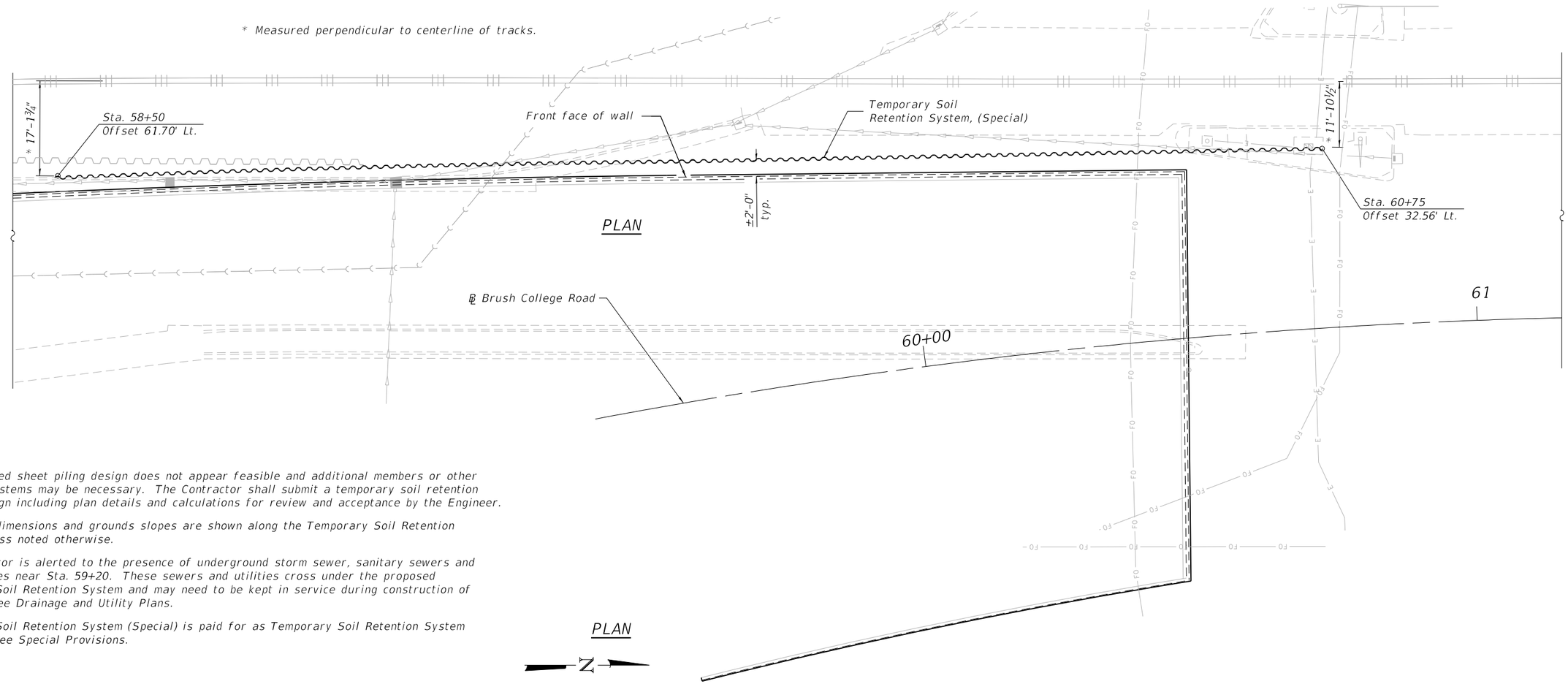

PLAN

Notes:

1. A cantilevered sheet piling design does not appear feasible and additional members or other retention systems may be necessary. The Contractor shall submit a temporary soil retention system design including plan details and calculations for review and acceptance by the Engineer.
2. Horizontal dimensions and grounds slopes are shown along the Temporary Soil Retention System unless noted otherwise.
3. The contractor is alerted to the presence of underground storm sewer, sanitary sewers and other utilities near Sta. 59+20. These sewers and utilities cross under the proposed Temporary Soil Retention System and may need to be kept in service during construction of the wall. See Drainage and Utility Plans.
4. Temporary Soil Retention System (Special) is paid for as Temporary Soil Retention System (Special). See Special Provisions.

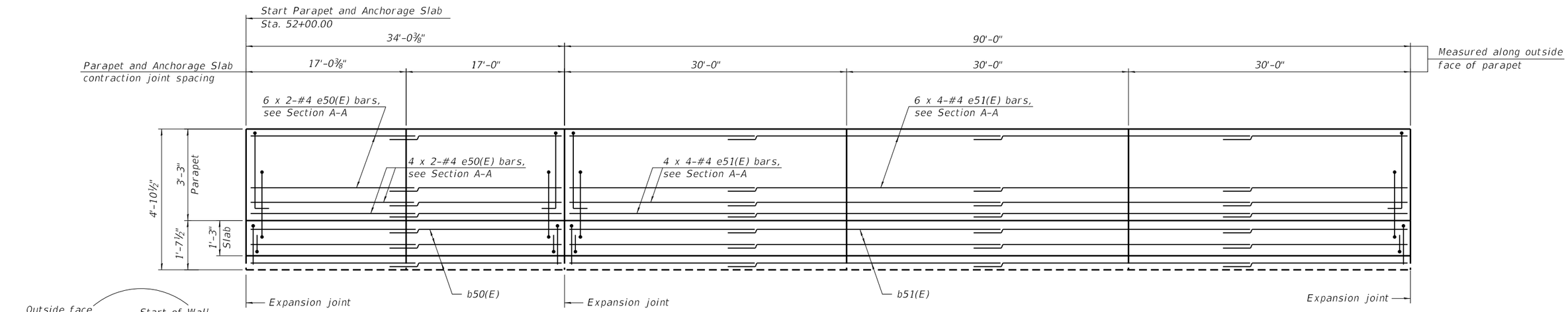

INSIDE ELEVATION OF WEST PARAPET AND ANCHORAGE SLAB

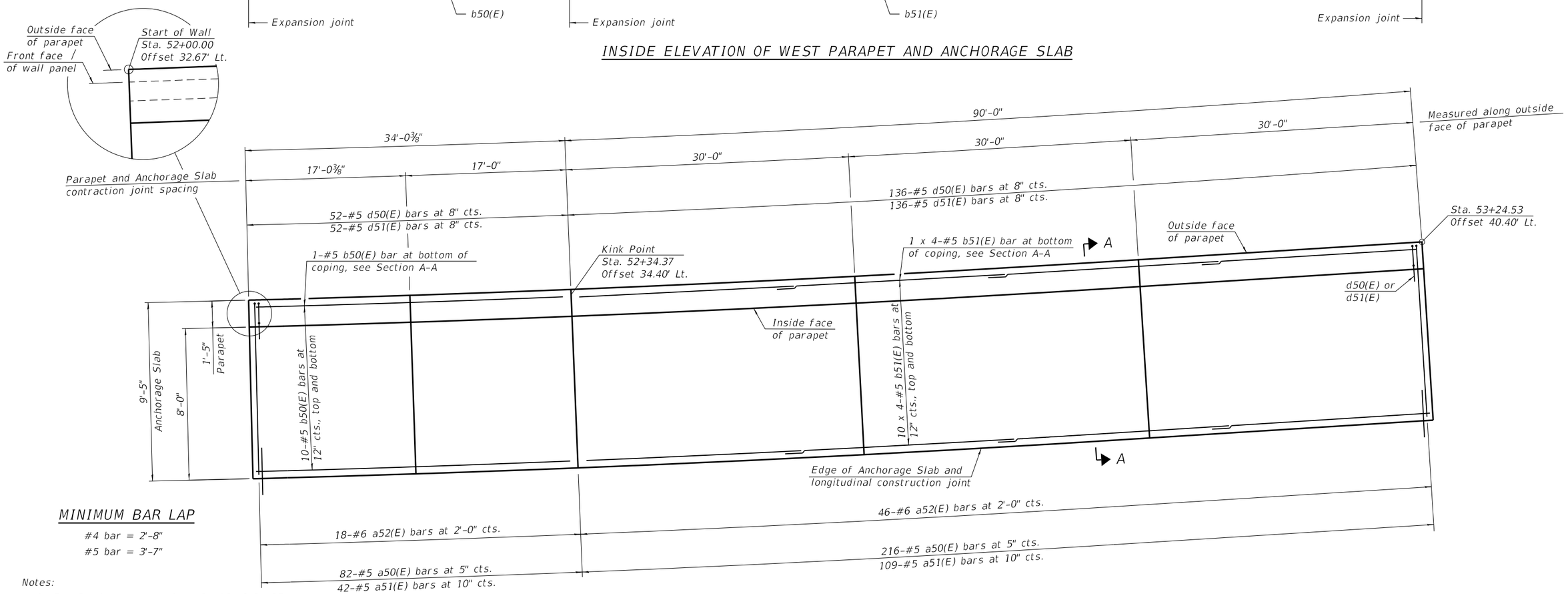

WEST PARAPET AND ANCHORAGE SLAB PLAN

MINIMUM BAR LAP

#4 bar = 2'-8"

#5 bar = 3'-7"

Notes:

1. For Section A-A see sheet SA-16 of SA-25.
2. See sheet SA-16 of SA-25 for Anchorage Slab details, light pole details, parapet joint details, bar bend details and Bill of Material.
3. Portion of Anchorage Slab within the traveled way shall be finished to match PPC pavement finish according to Section 420.09 of the Standard Specifications.
4. For light pole, traffic signal and junction box details, see Electrical Plans.

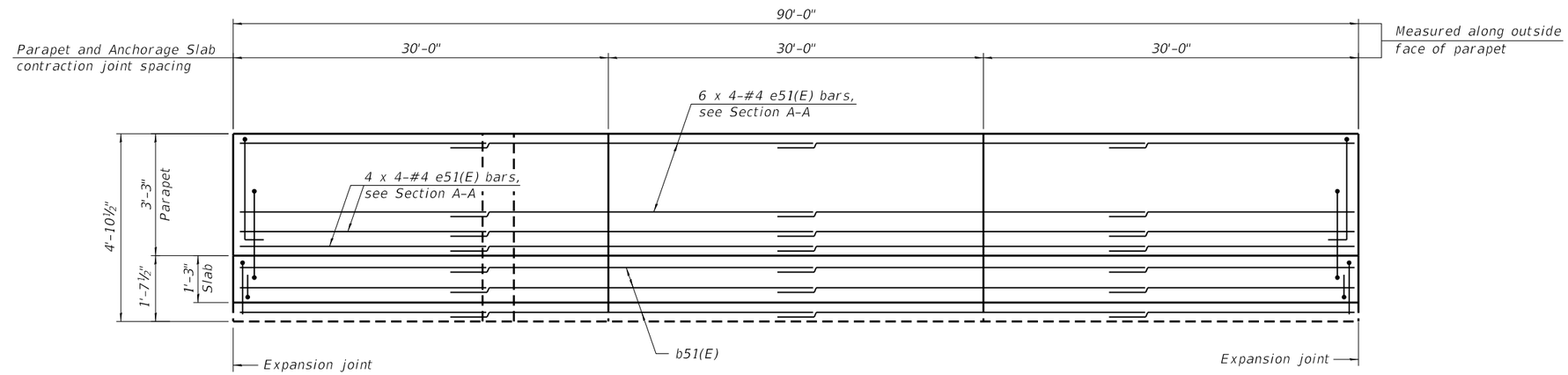

INSIDE ELEVATION OF WEST PARAPET AND ANCHORAGE SLAB

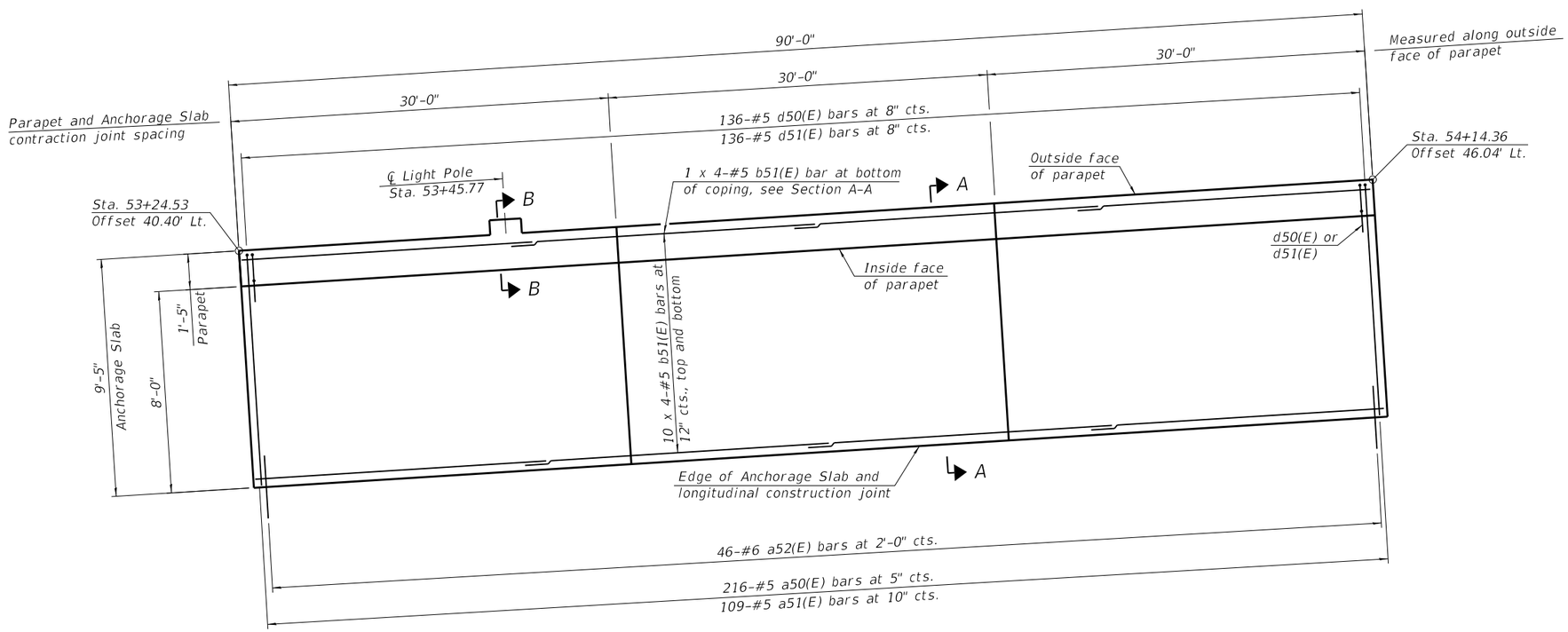

WEST PARAPET AND ANCHORAGE SLAB PLAN

MINIMUM BAR LAP

#4 bar = 2'-8"

#5 bar = 3'-7"

Notes:

1. For Section A-A and B-B see sheet SA-16 of SA-25.
2. See sheet SA-16 of SA-25 for Anchorage Slab details, light pole details, parapet joint details, bar bend details and Bill of Material.
3. Portion of Anchorage Slab within the traveled way shall be finished to match PPC pavement finish according to Section 420.09 of the Standard Specifications.
4. For light pole, traffic signal and junction box details, see Electrical Plans.

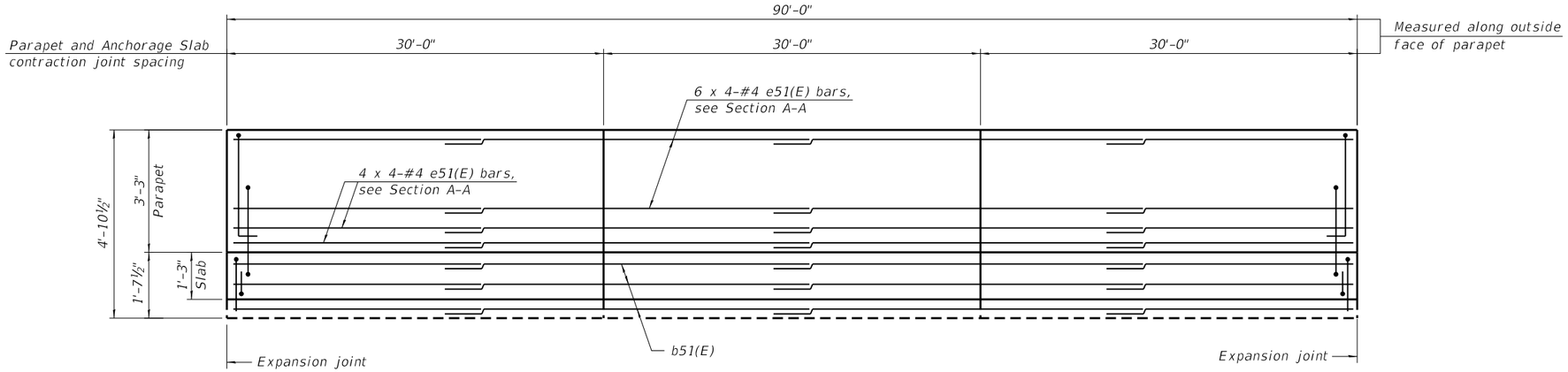

INSIDE ELEVATION OF WEST PARAPET AND ANCHORAGE SLAB

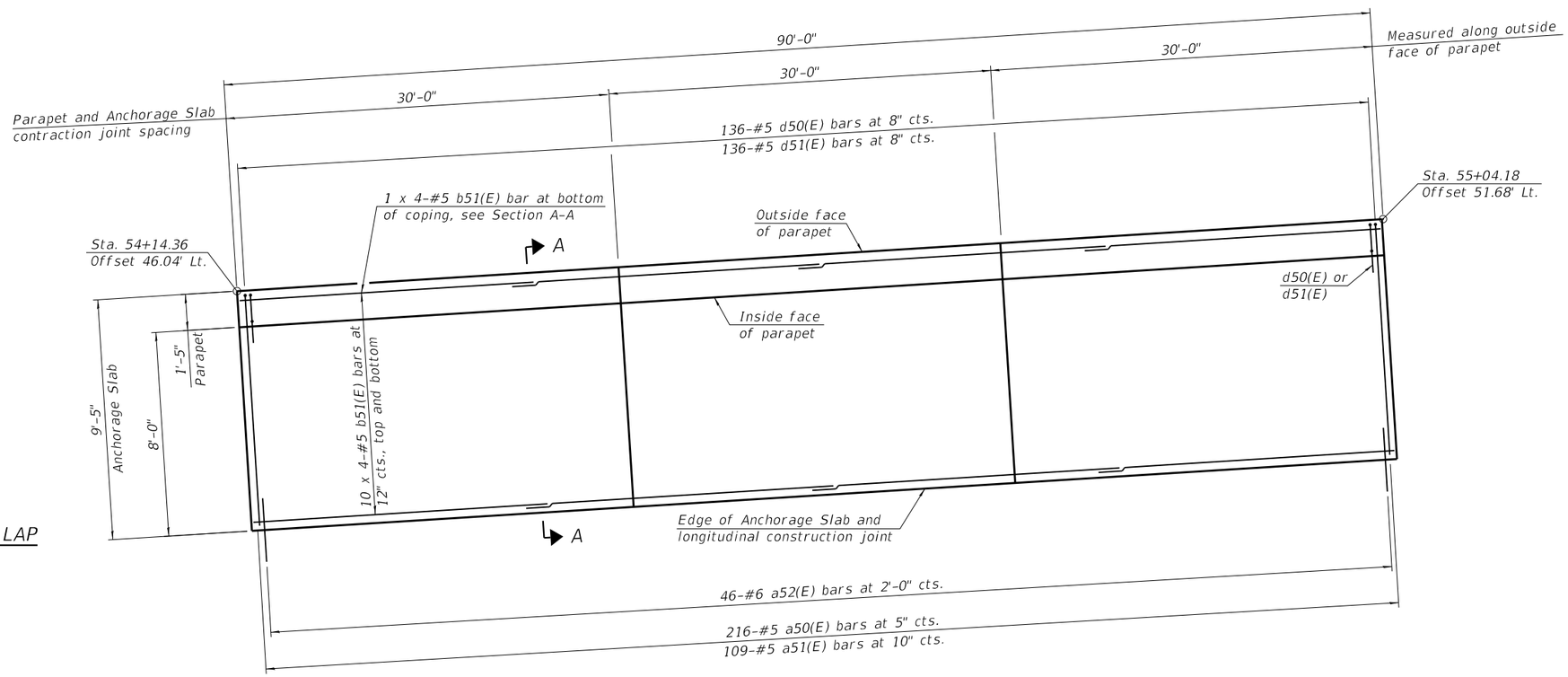

WEST PARAPET AND ANCHORAGE SLAB PLAN

MINIMUM BAR LAP

#4 bar = 2'-8"

#5 bar = 3'-7"

N

Notes:

1. For Section A-A see sheet SA-16 of SA-25.
2. See sheet SA-16 of SA-25 for Anchorage Slab details, light pole details, parapet joint details, bar bend details and Bill of Material.
3. Portion of Anchorage Slab within the traveled way shall be finished to match PPC pavement finish according to Section 420.09 of the Standard Specifications.
4. For light pole, traffic signal and junction box details, see Electrical Plans.

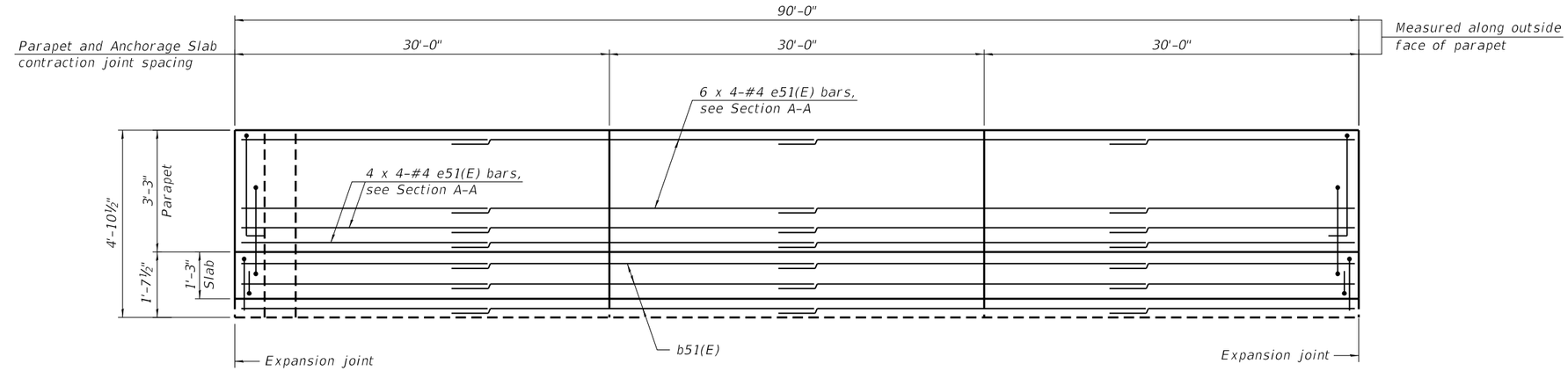

INSIDE ELEVATION OF WEST PARAPET AND ANCHORAGE SLAB

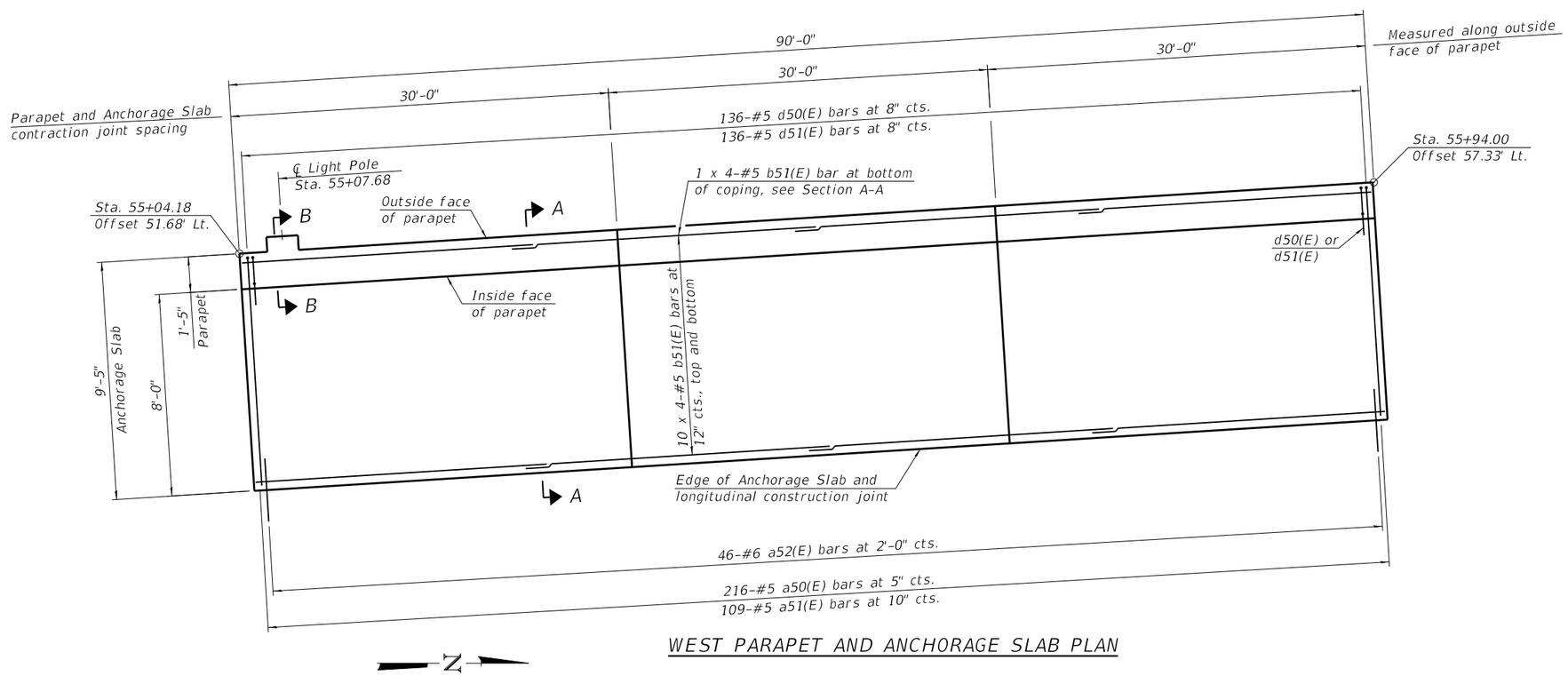

WEST PARAPET AND ANCHORAGE SLAB PLAN

MINIMUM BAR LAP

#4 bar = 2'-8"

#5 bar = 3'-7"

Notes:

1. For Section A-A and B-B see sheet SA-16 of SA-25.
2. See sheet SA-16 of SA-25 for Anchorage Slab details, light pole details, parapet joint details, bar bend details and Bill of Material.
3. Portion of Anchorage Slab within the traveled way shall be finished to match PPC pavement finish according to Section 420.09 of the Standard Specifications.
4. For light pole, traffic signal and junction box details, see Electrical Plans.

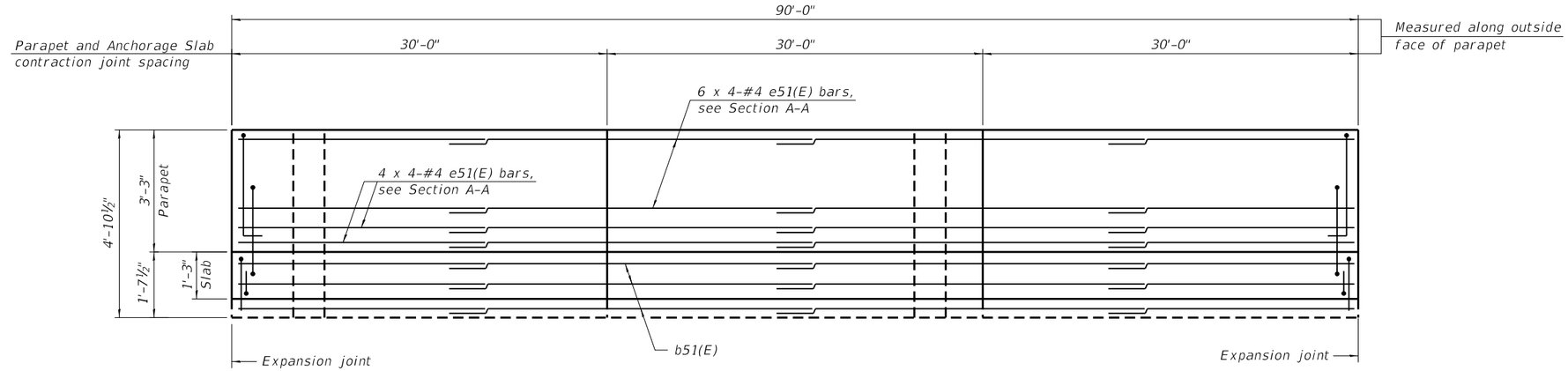

INSIDE ELEVATION OF WEST PARAPET AND ANCHORAGE SLAB

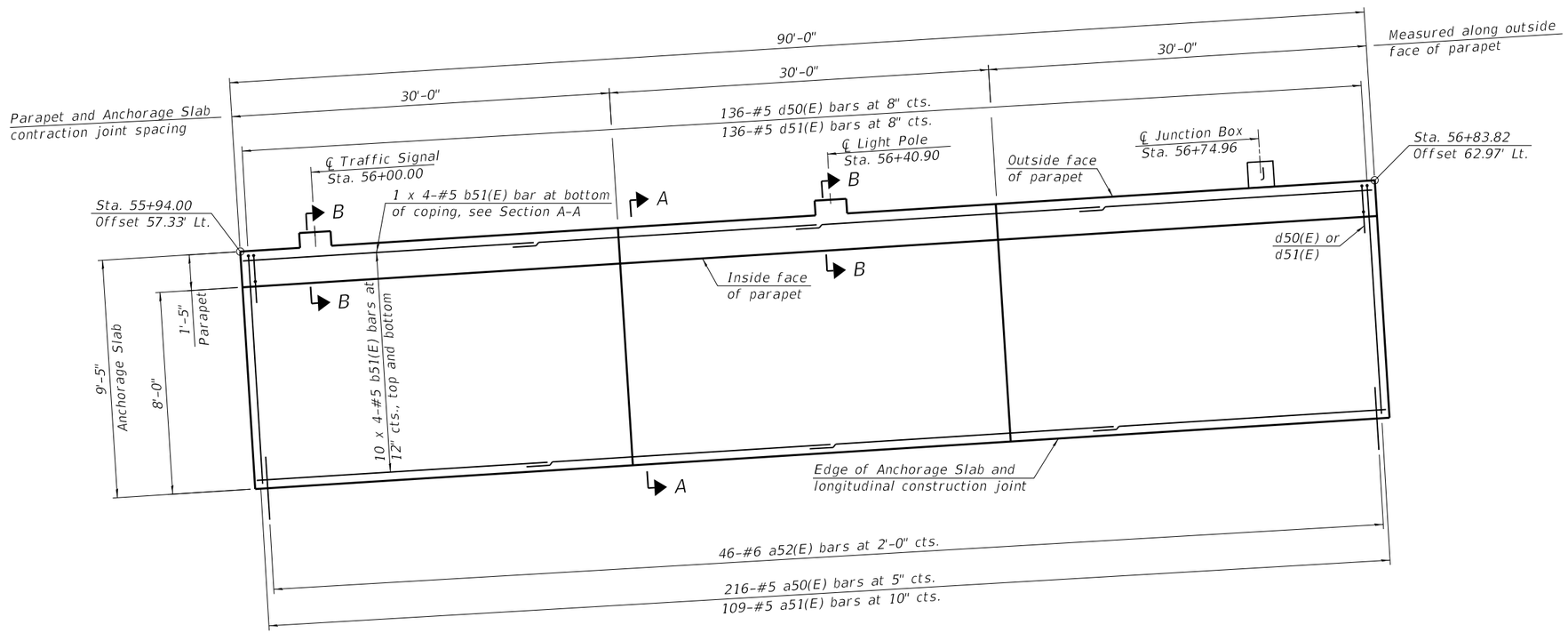

WEST PARAPET AND ANCHORAGE SLAB PLAN

MINIMUM BAR LAP

#4 bar = 2'-8"

#5 bar = 3'-7"

Notes:

1. For Section A-A and B-B see sheet SA-16 of SA-25.
2. See sheet SA-16 of SA-25 for Anchorage Slab details, light pole details, parapet joint details, bar bend details and Bill of Material.
3. Portion of Anchorage Slab within the traveled way shall be finished to match PPC pavement finish according to Section 420.09 of the Standard Specifications.
4. For light pole, traffic signal and junction box details, see Electrical Plans.

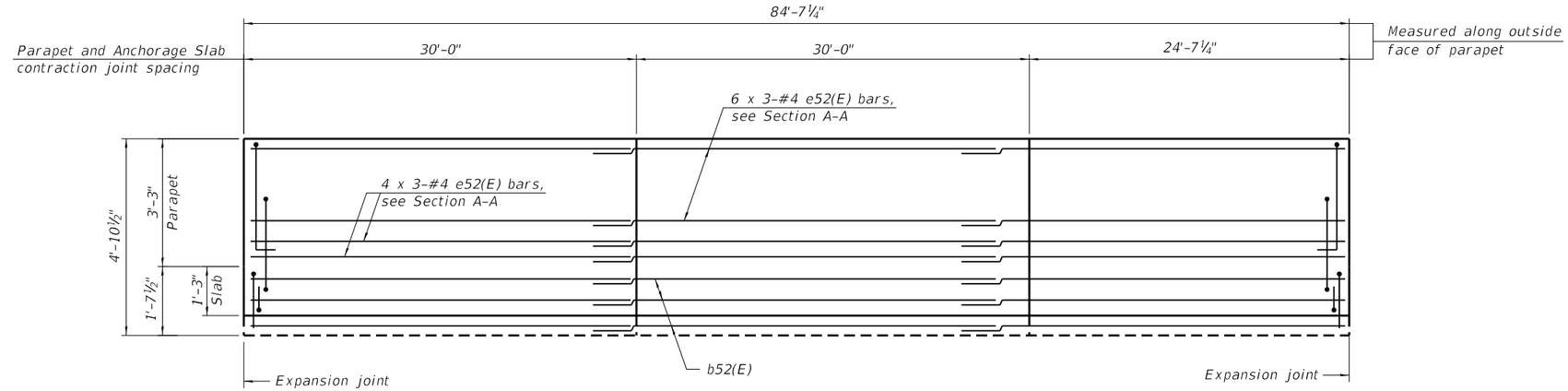

INSIDE ELEVATION OF WEST PARAPET AND ANCHORAGE SLAB

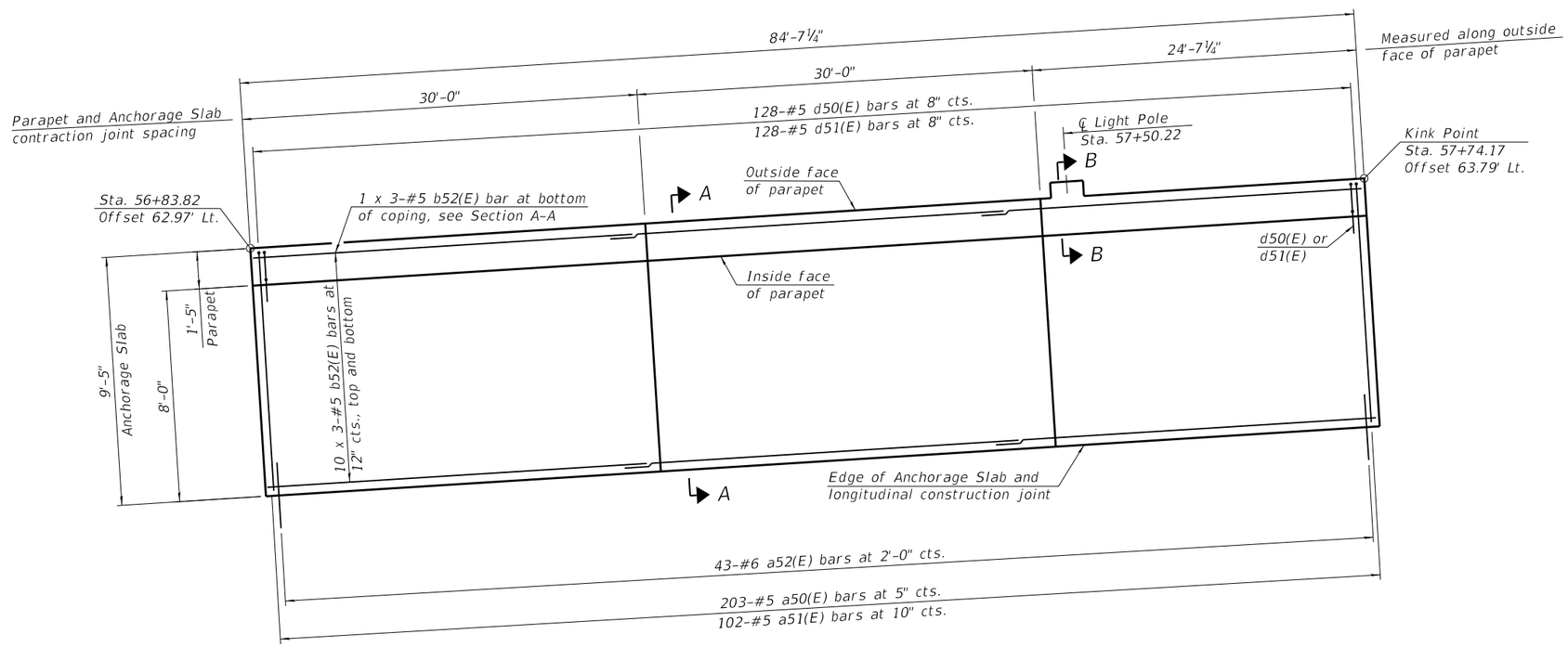

WEST PARAPET AND ANCHORAGE SLAB PLAN

MINIMUM BAR LAP

#4 bar = 2'-8"

#5 bar = 3'-7"

Notes:

1. For Section A-A and B-B see sheet SA-16 of SA-25.
2. See sheet SA-16 of SA-25 for Anchorage Slab details, light pole details, parapet joint details, bar bend details and Bill of Material.
3. Portion of Anchorage Slab within the traveled way shall be finished to match PPC pavement finish according to Section 420.09 of the Standard Specifications.
4. For light pole, traffic signal and junction box details, see Electrical Plans.

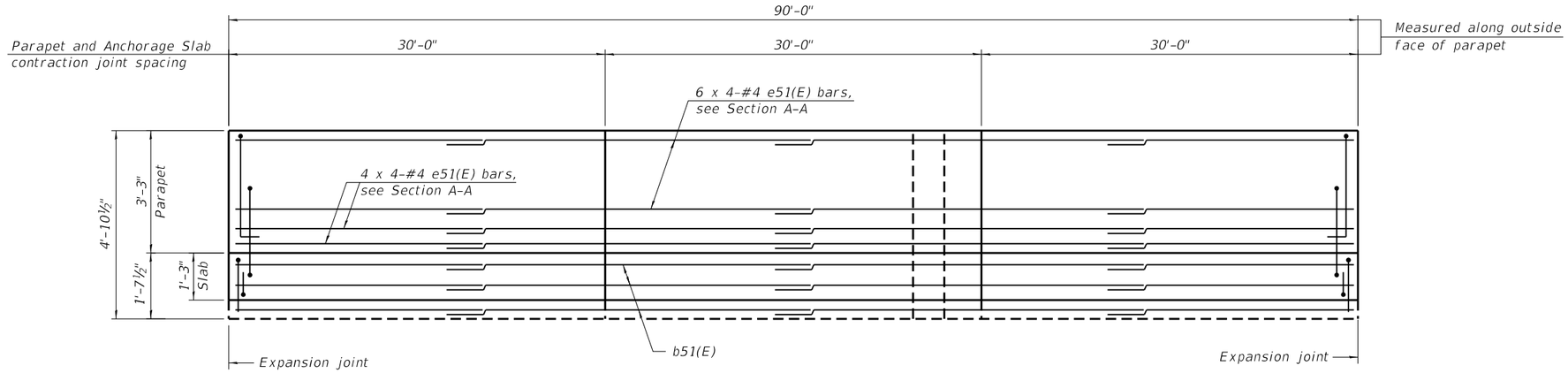

INSIDE ELEVATION OF WEST PARAPET AND ANCHORAGE SLAB

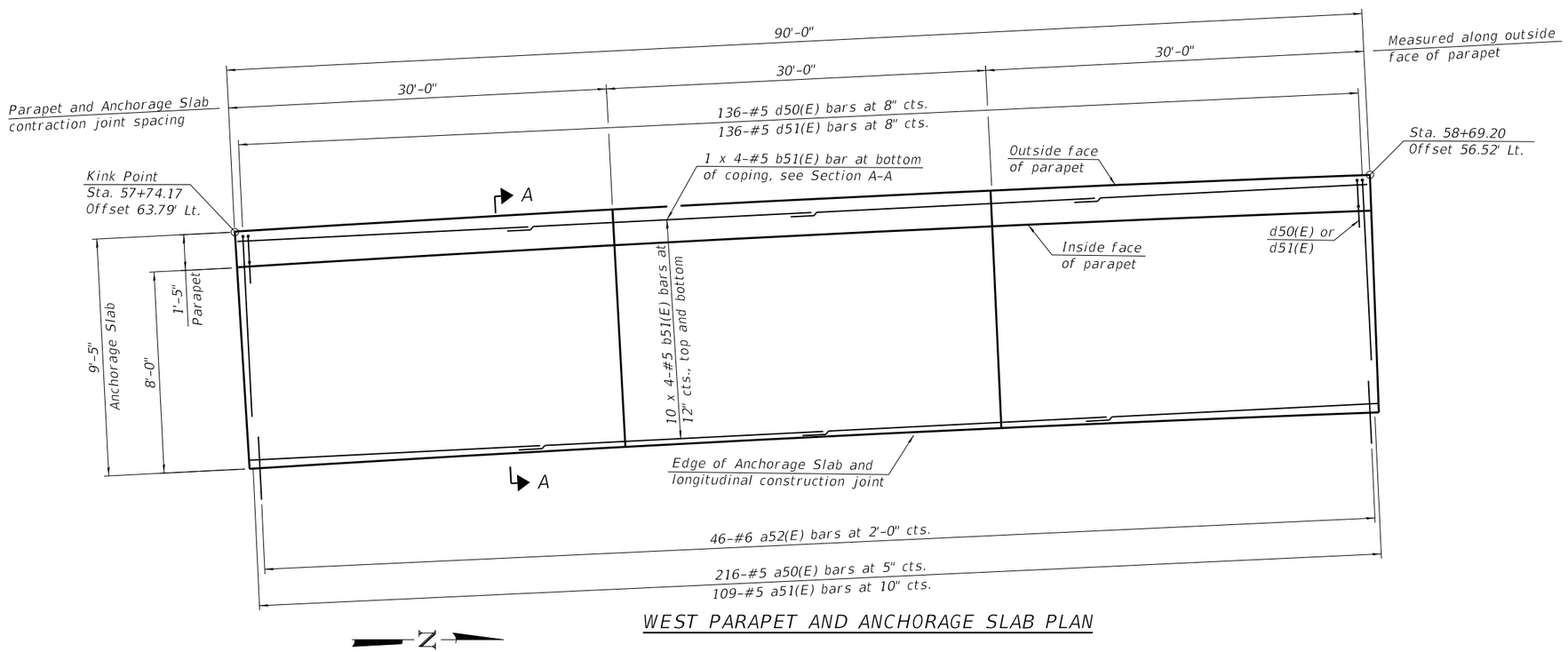

WEST PARAPET AND ANCHORAGE SLAB PLAN

MINIMUM BAR LAP

#4 bar = 2'-8"

#5 bar = 3'-7"

Notes:

1. For Section A-A see sheet SA-16 of SA-25.
2. See sheet SA-16 of SA-25 for Anchorage Slab details, light pole details, parapet joint details, bar bend details and Bill of Material.
3. Portion of Anchorage Slab within the traveled way shall be finished to match PPC pavement finish according to Section 420.09 of the Standard Specifications.
4. For light pole, traffic signal and junction box details, see Electrical Plans.

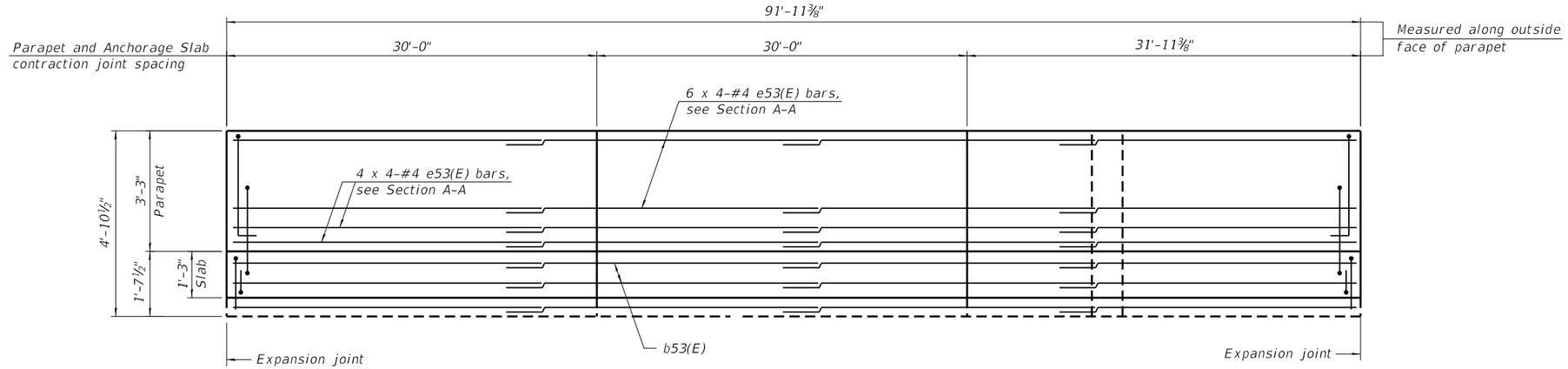

INSIDE ELEVATION OF WEST PARAPET AND ANCHORAGE SLAB

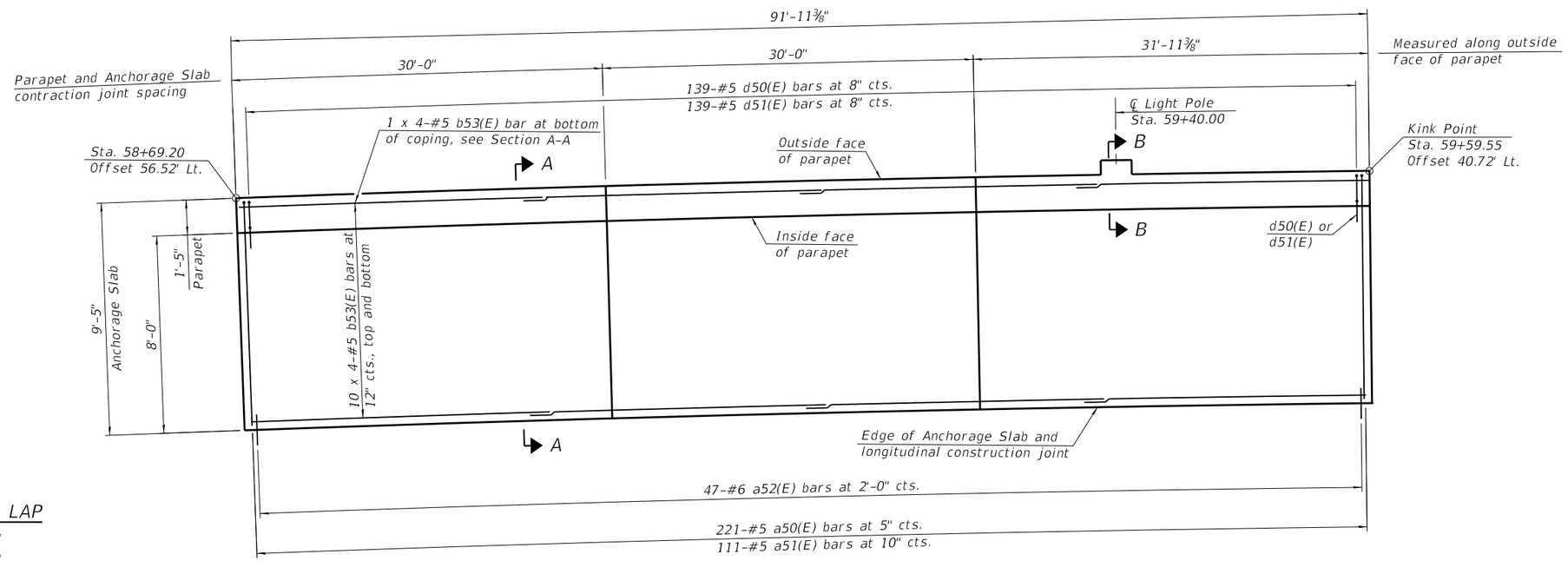

MINIMUM BAR LAP

#4 bar = 2'-8"

#5 bar = 3'-7"

N

WEST PARAPET AND ANCHORAGE SLAB PLAN

Notes:

1. For Section A-A and B-B see sheet SA-16 of SA-25.
2. See sheet SA-16 of SA-25 for Anchorage Slab details, light pole details, parapet joint details, bar bend details and Bill of Material.
3. Portion of Anchorage Slab within the traveled way shall be finished to match PPC pavement finish according to Section 420.09 of the Standard Specifications.
4. For light pole, traffic signal and junction box details, see Electrical Plans.

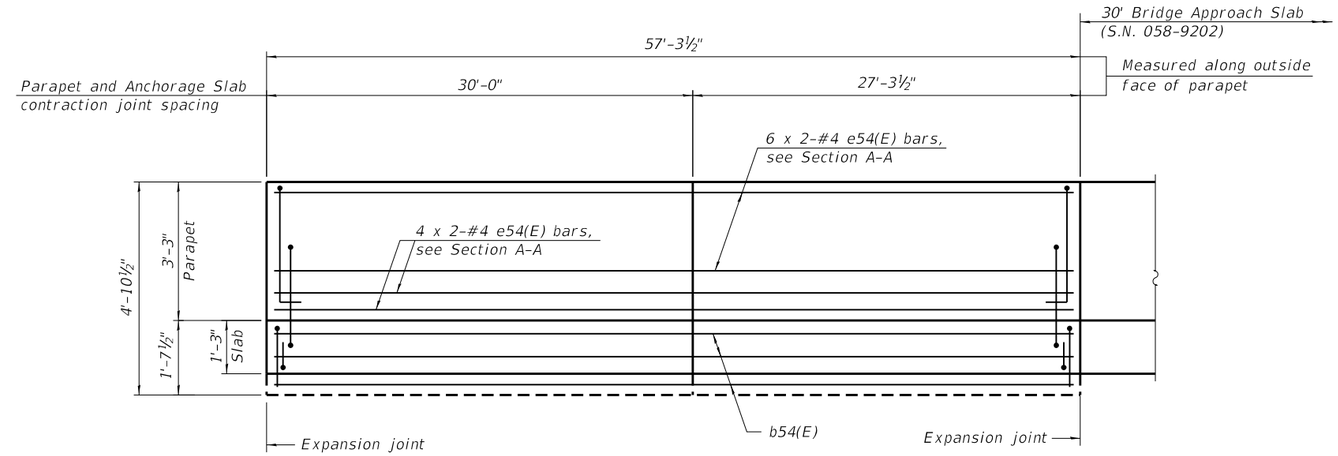

INSIDE ELEVATION OF WEST PARAPET AND ANCHORAGE SLAB

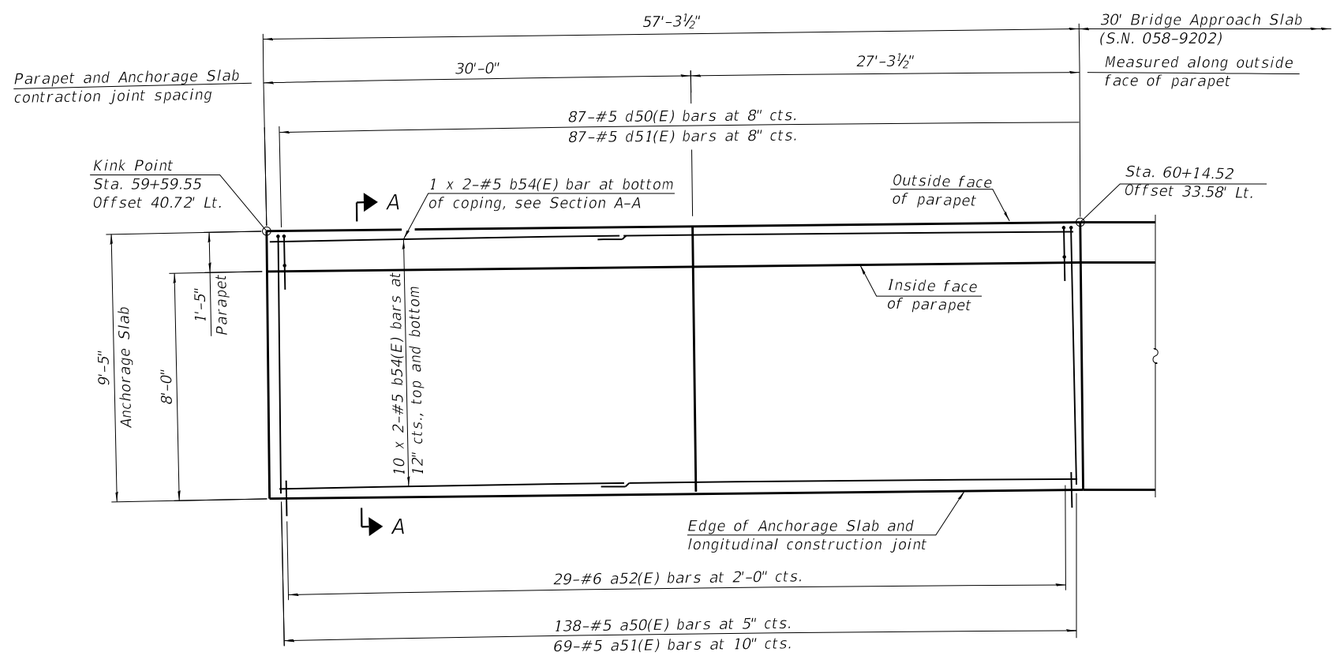

WEST PARAPET AND ANCHORAGE SLAB PLAN

N

MINIMUM BAR LAP

#4 bar = 2'-8"

#5 bar = 3'-7"

Notes:

1. For Section A-A see sheet SA-16 of SA-25.
2. See sheet SA-16 of SA-25 for Anchorage Slab details, light pole details, parapet joint details, bar bend details and Bill of Material.
3. Portion of Anchorage Slab within the traveled way shall be finished to match PPC pavement finish according to Section 420.09 of the Standard Specifications.
4. For light pole, traffic signal and junction box details, see Electrical Plans.

LAST SAVED DATE S:\ASTSAVEDDATES

FILE NAME: L:\Jobs\AECOM\08570 Brush College Road\CADD\CADD Sheets\60603202_SN058W003.dgn

design firm no. 184001036

whks engineers • planners • land surveyors

USER NAME = dheberling	DESIGNED - SDS	REVISED	
FILE NAME = 60603202_SN058W003.dgn	CHECKED - CWC	REVISED	
PLOT SCALE = 0.17' / in.	DRAWN - DLH	REVISED	
PLOT DATE = 10/30/2020	CHECKED - SDS	REVISED	

STATE OF ILLINOIS
DEPARTMENT OF TRANSPORTATION

WEST PARAPET AND ANCHORAGE SLAB PLAN AND ELEVATION 9
STRUCTURE NO. 058-W003

SHEET NO. SA-14 OF SA-25 SHEETS

F.A.U. RTE.	SECTION	COUNTY	TOTAL SHEETS	SHEET NO.
7448	09-00933-01-BR	MACON	996	533

CONTRACT NO. 6WGY(165)

ILLINOIS FED. AID PROJECT

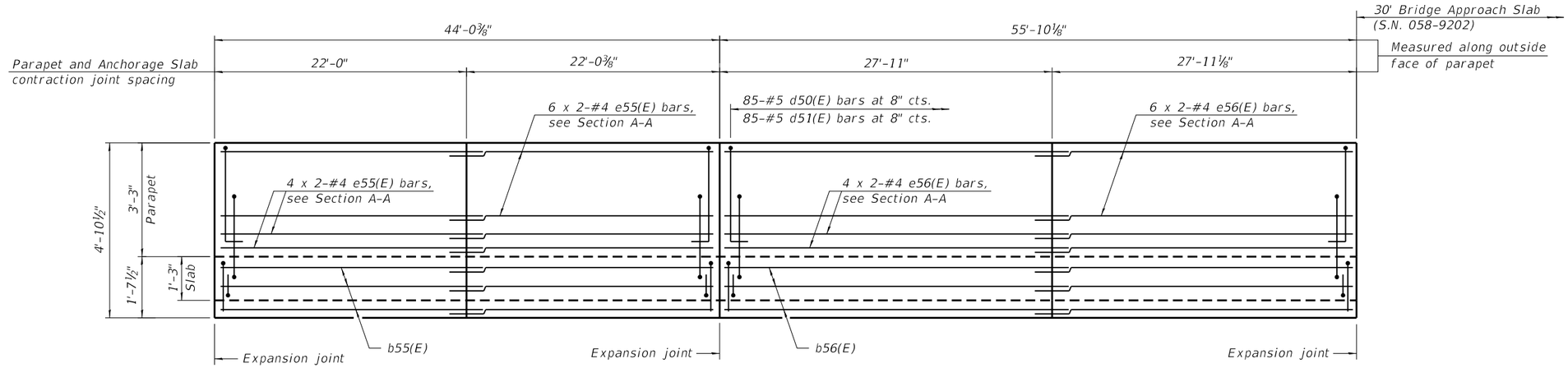

OUTSIDE ELEVATION OF EAST PARAPET AND ANCHORAGE SLAB

MINIMUM BAR LAP

#4 bar = 2'-8"

#5 bar = 3'-7"

Notes:

1. For Section A-A and C-C see sheet SA-16 of SA-25.
2. See sheet SA-16 of SA-25 for Anchorage Slab details, light pole details, parapet joint details, bar bend details and Bill of Material.
3. Portion of Anchorage Slab within the traveled way shall be finished to match PPC pavement finish according to Section 420.09 of the Standard Specifications.
4. For light pole, traffic signal and junction box details, see Electrical Plans.

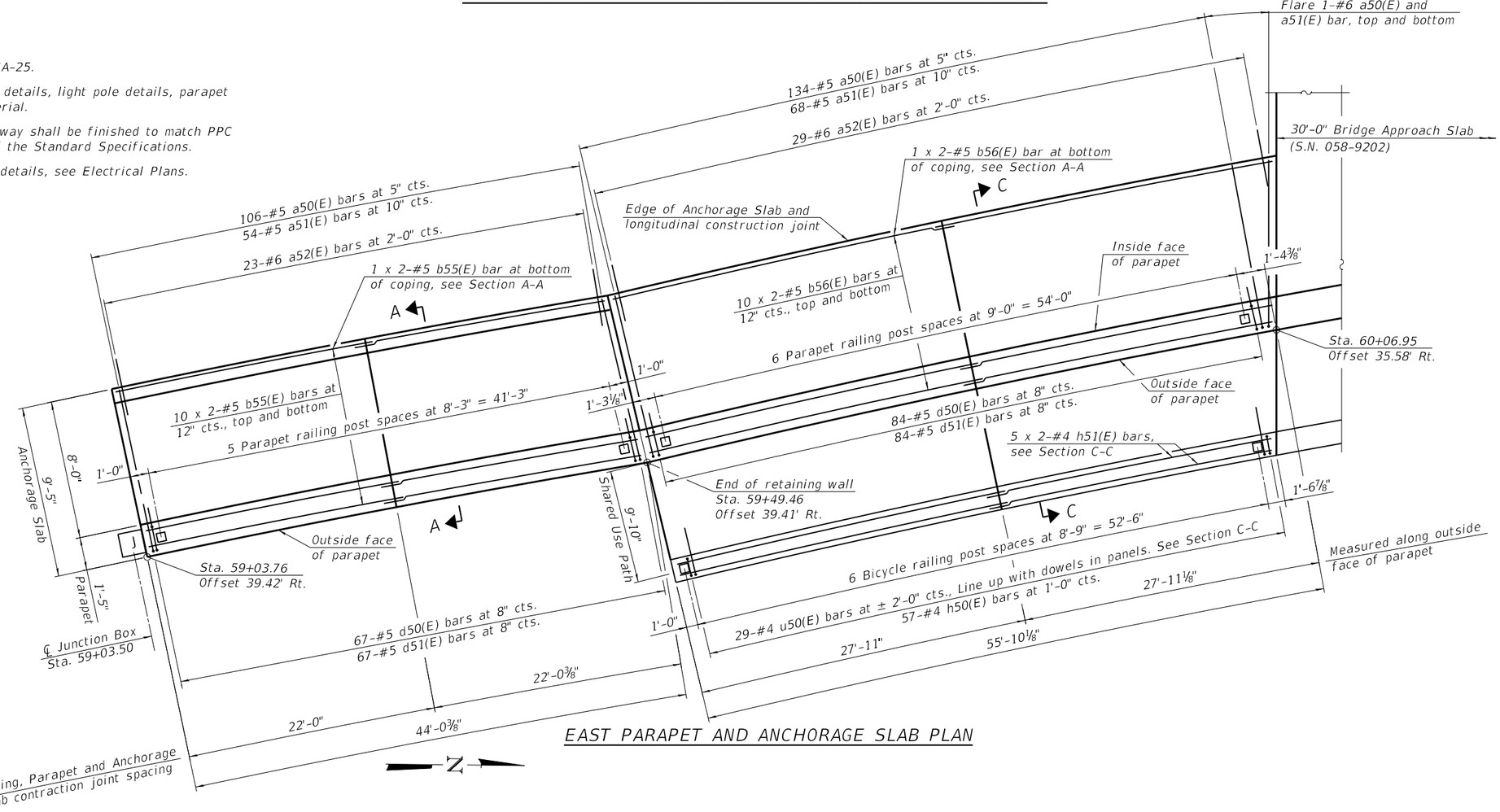

EAST PARAPET AND ANCHORAGE SLAB PLAN

LAST SAVED DATE S:\ASTSAVEDDATES

FILE NAME: L:\Jobs\AECOM\68670 Brush College Road\CADD\CADD Sheets\60603202_5N058W003.dgn

design firm no. 184001036

whks engineers • planners • land surveyors

USER NAME = dheberling	DESIGNED - SDS	REVISED	
FILE NAME = 60603202_5N058W003.dgn	CHECKED - CWC	REVISED	
PLOT SCALE = 0.17' / in.	DRAWN - DLH	REVISED	
PLOT DATE = 10/30/2020	CHECKED - SDS	REVISED	

STATE OF ILLINOIS
DEPARTMENT OF TRANSPORTATION

EAST PARAPET AND ANCHORAGE SLAB PLAN AND ELEVATION
STRUCTURE NO. 058-W003

SHEET NO. SA-15 OF SA-25 SHEETS

F.A.U. RTE.	SECTION	COUNTY	TOTAL SHEETS	SHEET NO.
7448	09-00933-01-BR	MACON	996	534
		CONTRACT NO. 6WGY(165)		
		ILLINOIS	FED. AID PROJECT	

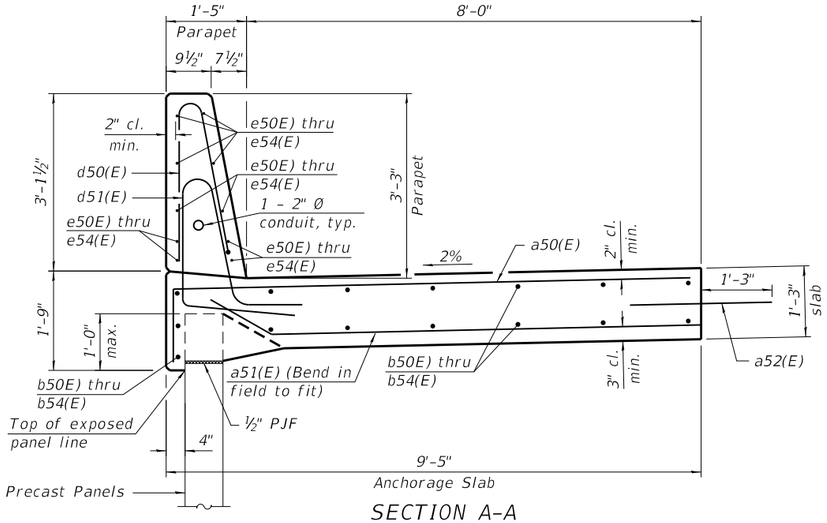

SECTION A-A

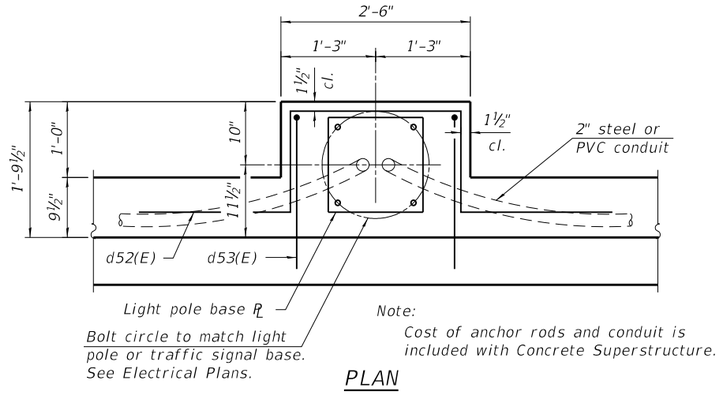

PLAN

BILL OF MATERIAL

Bar	No.	Size	Length	Shape
a50(E)	1964	#6	10'-7"	
a51(E)	991	#6	9'-3"	
a52(E)	284	#6	3'-0"	
a53(E)	34	#5	1'-6"	
b50(E)	8	#5	33'-9"	
b51(E)	160	#5	25'-2"	
b52(E)	24	#5	30'-6"	
b53(E)	32	#5	25'-8"	
b54(E)	16	#5	30'-4"	
b55(E)	16	#5	23'-8"	
b56(E)	16	#5	30'-2"	
d50(E)	1237	#5	6'-5"	
d51(E)	1237	#5	9'-5"	
d52(E)	18	#6	4'-10"	
d53(E)	30	#6	8'-11"	
e50(E)	20	#4	18'-3"	
e51(E)	200	#4	24'-6"	
e52(E)	30	#4	29'-11"	
e53(E)	40	#4	25'-0"	
e54(E)	20	#4	29'-11"	
e55(E)	20	#4	23'-3"	
e56(E)	20	#4	29'-3"	
h50(E)	57	#4	4'-4"	
h51(E)	10	#4	29'-3"	
u50(E)	29	#4	2'-9"	
Concrete Superstructure			Cu. Yd.	483.5
Protective Coat			Sq. Yd.	1,100
Reinforcement Bars, Epoxy Coated			Pound	70,770
Portland Cement Concrete Sidewalk, 5 inch			Sq. Ft.	540

Bars indicated thus 6 x 3-#8 etc. indicates 6 line of bars with 3 lengths per line.

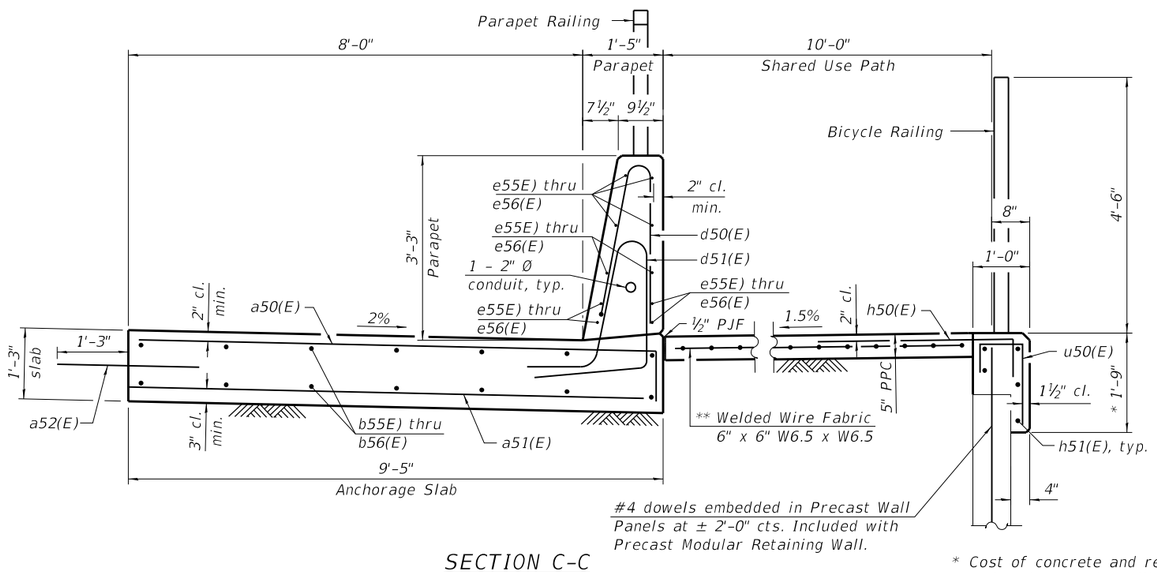

SECTION C-C

* Cost of concrete and reinforcement for coping under the Bicycle Railing is included with the pay items Concrete Superstructure and Reinforcement Bars, Epoxy Coated.

** Cost of Welded Wire Fabric is included with Portland Cement Concrete Sidewalk, 5 Inch.

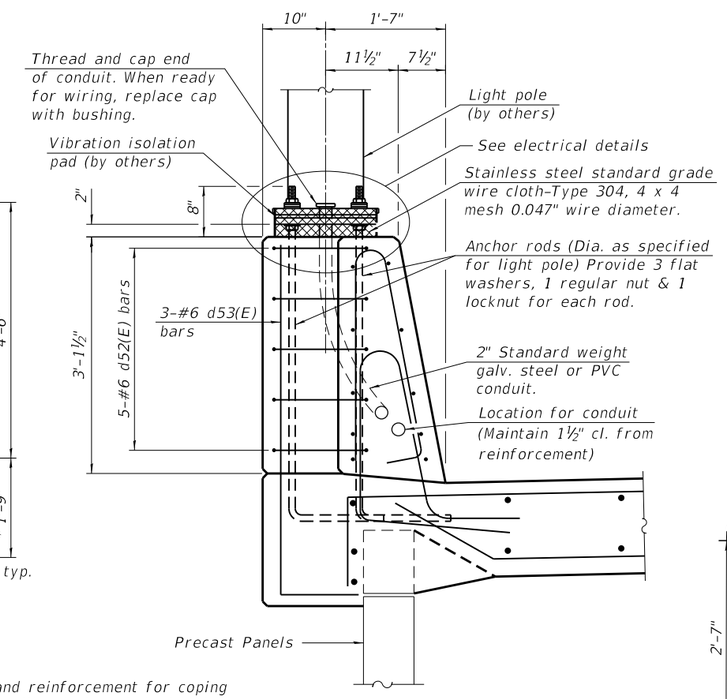

SECTION B-B

(6 Locations)

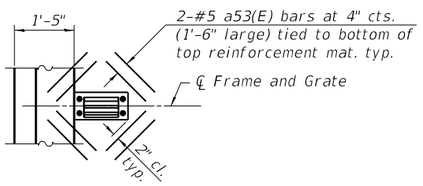

DRAINAGE INLET

(4 locations, see Roadway Plans.)

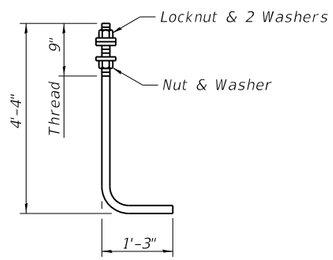

ANCHOR ROD

Diameter as specified for light poles.
(ASTM F 1554 Grade 105)
Full length hot dipped galvanized.

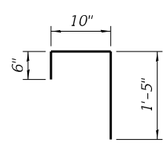

BAR u50(E)

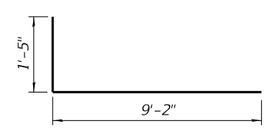

BAR a50(E)

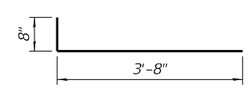

BAR h50(E)

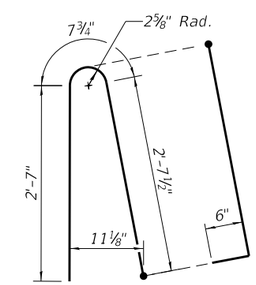

BAR d50(E)

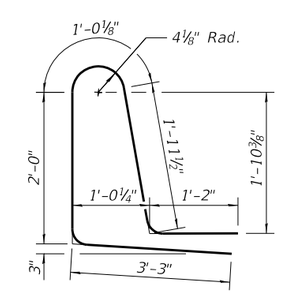

BAR d51(E)

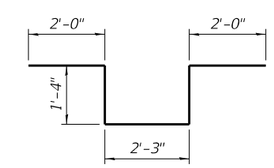

BAR d52(E)

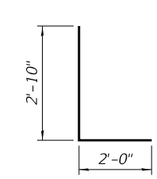

BAR d53(E)

LAST SAVED DATE: 5-DATSAVEDDATES

FILE NAME: L:\Jobs\AECOM\8870 Brush College Road\CADD\CADD Sheets\60603202_SN058W003.dgn

design firm no. 184001036 — whks engineers • planners • land surveyors

USER NAME = dheberling	DESIGNED - SDS	REVISED	
FILE NAME = 60603202_SN058W003.dgn	CHECKED - CWC	REVISED	
PLOT SCALE = 0.17' / in.	DRAWN - DLH	REVISED	
PLOT DATE = 10/30/2020	CHECKED - SDS	REVISED	

STATE OF ILLINOIS
DEPARTMENT OF TRANSPORTATION

PARAPET AND ANCHORAGE SLAB DETAILS
STRUCTURE NO. 058-W003

SHEET NO. SA-16 OF SA-25 SHEETS

F.A.U. RTE.	SECTION	COUNTY	TOTAL SHEETS	SHEET NO.
7448	09-00933-01-BR	MACON	996	535

CONTRACT NO. 6WGY(165)

ILLINOIS FED. AID PROJECT

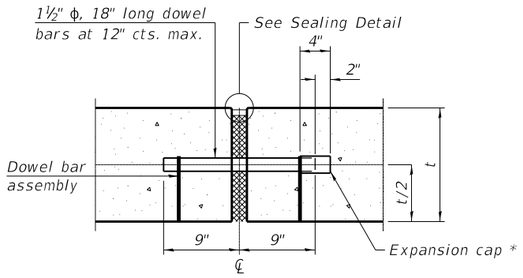

ANCHORAGE SLAB EXPANSION JOINT

Expansion joint and dowel bars included
in the cost of Concrete Superstructure

* Expansion caps shall be installed on the exposed end of each dowel bar once the header has been removed and the joint filler material has been installed.

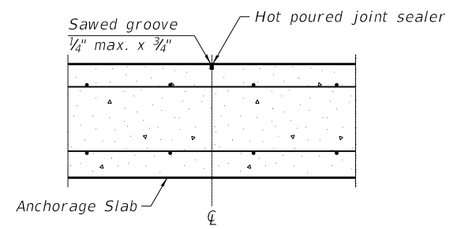

TRANSVERSE CONTRACTION JOINT

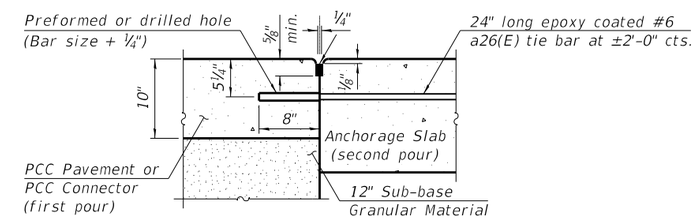

LONGITUDINAL CONSTRUCTION JOINT GROUTED-IN-PLACE TIE BAR

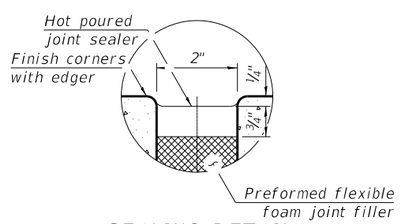

SEALING DETAIL

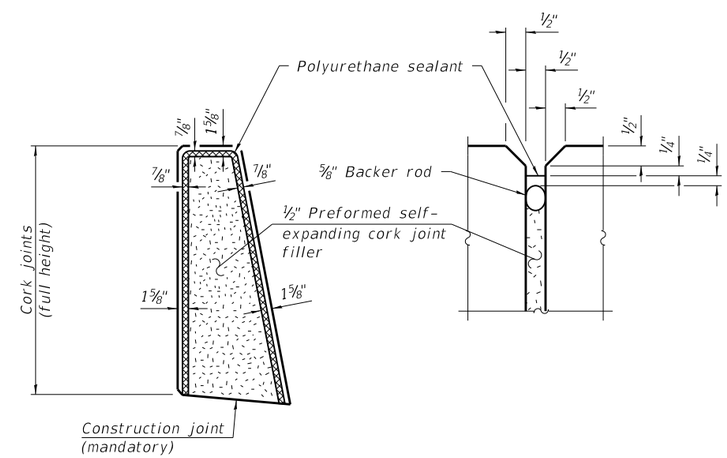

PARAPET EXPANSION JOINT DETAILS

Note:
The polyurethane sealant shall be according to Article 1050.04 of the Standard Specifications and the color shall be gray.

LAST SAVED DATE S:\ASTSAVEDDATES

FILE NAME: L:\Jobs\AECOM\08720 Brush College Road\CADD\CADD Sheets\60603202_SN058W003.dgn

design firm no. 184001036 — whks engineers • planners • land surveyors

USER NAME = dheberling	DESIGNED - SDS	REVISED	
FILE NAME = 60603202_SN058W003.dgn	CHECKED - CWC	REVISED	
PLOT SCALE = 0.17' / in.	DRAWN - DLH	REVISED	
PLOT DATE = 10/30/2020	CHECKED - SDS	REVISED	

STATE OF ILLINOIS
DEPARTMENT OF TRANSPORTATION

PARAPET JOINT AND DETAILS
STRUCTURE NO. 058-W003

SHEET NO. SA-17 OF SA-25 SHEETS

F.A.U. RTE.	SECTION	COUNTY	TOTAL SHEETS	SHEET NO.
7448	09-00933-01-BR	MACON	996	536

CONTRACT NO. 6WGY(165)

ILLINOIS FED. AID PROJECT

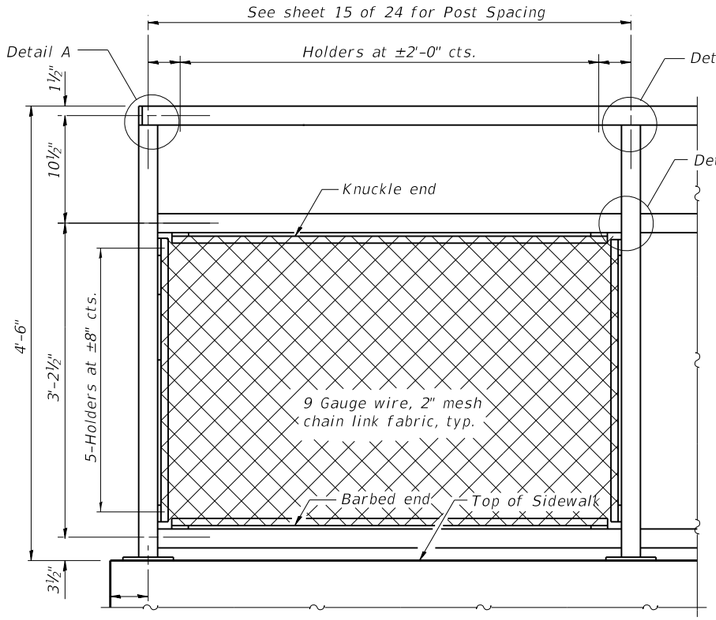

BICYCLE RAILING

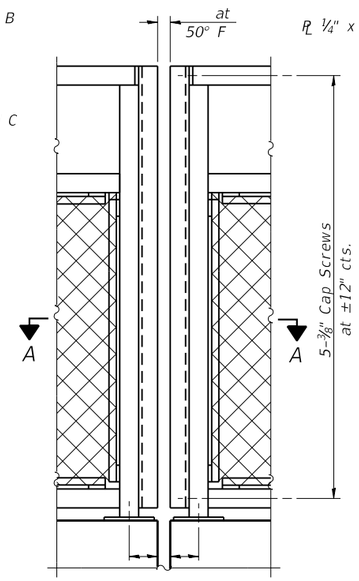

BICYCLE RAILING

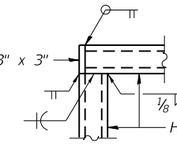

DETAIL A

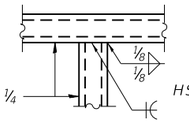

DETAIL B

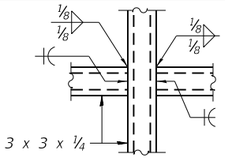

DETAIL C

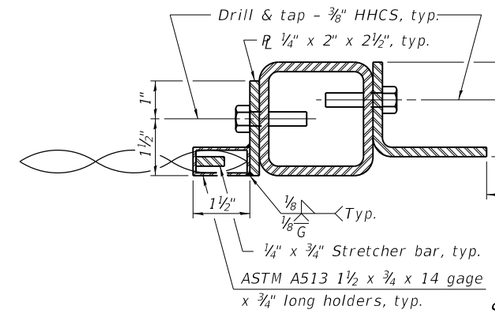

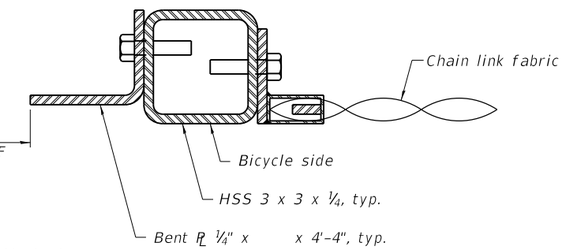

SECTION A-A

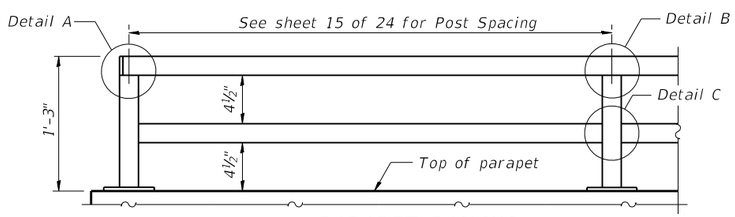

PARAPET RAILING
ELEVATION
(Inside Face of Two Element Rail)

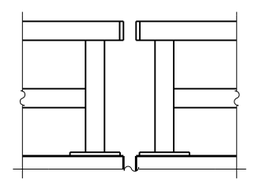

PARAPET RAILING
ELEVATION AT EXPANSION JOINT
(Two Element Rail Shown - Three Element Rail Similar)

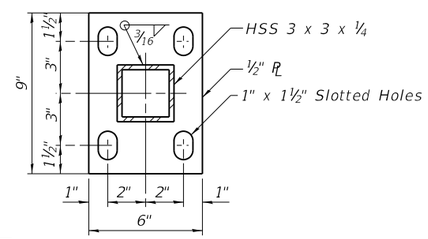

BASE PL

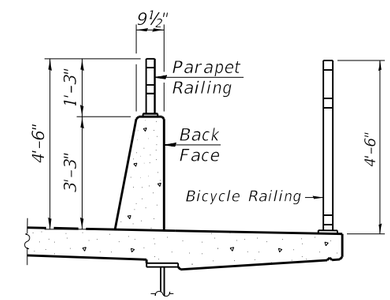

SECTION THRU DECK

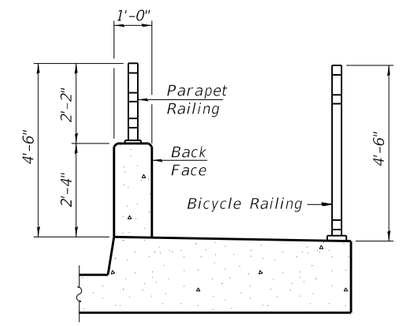

SECTION THRU SIDEWALK

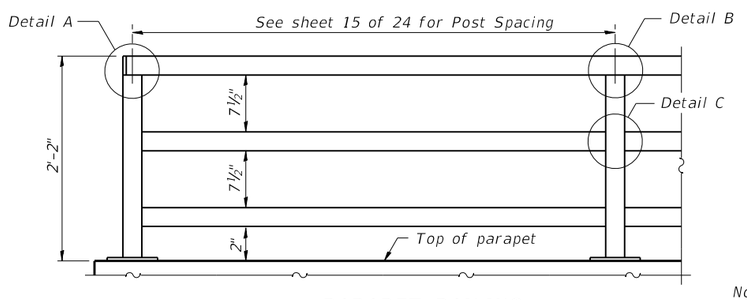

PARAPET RAILING
ELEVATION
(Inside Face of Three Element Rail)

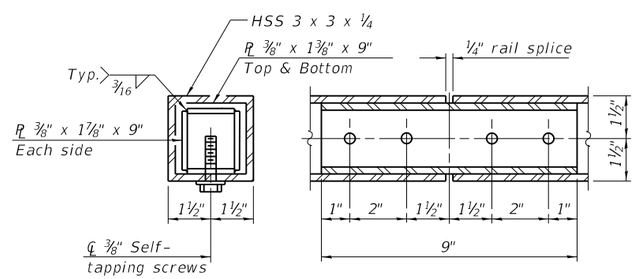

RAIL SPLICE

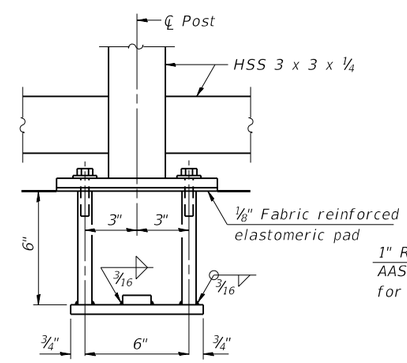

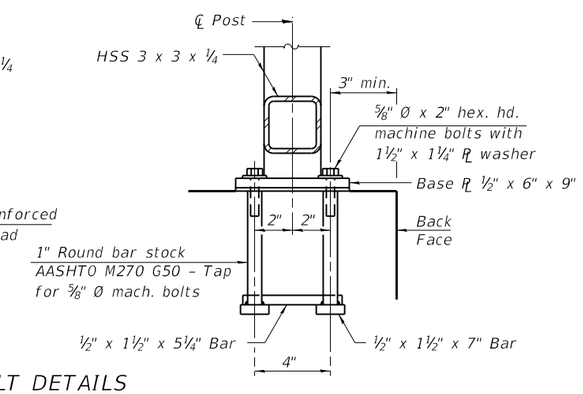

ANCHOR BOLT DETAILS

In lieu of the cast-in-place anchor device shown, the Contractor has the option of drilling and setting ⅝" Ø anchor rods according to Article 509.06 of the Standard Specifications. Embedment shall be according to the manufacturer's specifications.

Notes:

1. All structural steel tubing, post and railing, for parapet railing shall be CVN tested according to 1006.34(b) of the Standard Specifications.
2. CVN testing may be omitted for the Bicycle Railing.
3. All steel rail elements shall be galvanized according to Article 509.05 of the Standard Specifications.

BILL OF MATERIAL

Item	Unit	Quantity
Bicycle Railing	Foot	55
Parapet Railing	Foot	100

R-29 1-14-2019 (10'-0" Maximum Post Spacing)

ROUTE NO.	SECTION	COUNTY	TOTAL SHEETS	SHEET NO.
FAU 7448	*	MACON	94	57
FED. ROAD DIST. NO		ILLINOIS	PROJECT	

* 90-00119-00-PV

B.M. "X" CHISELED "□" AT BASE OF FENCE POST AT SW CORNER OF ILLINOIS POWER SUBSTATION. 32' RT. STA. 52+66 ELEV. 674.75

B.M. "A" NW CORNER OF CONCRETE BASE FOR A/C UNIT NEAR SW CORNER OF WELDING SHOP 51' RT. STA. 58+77 ELEV. 676.69

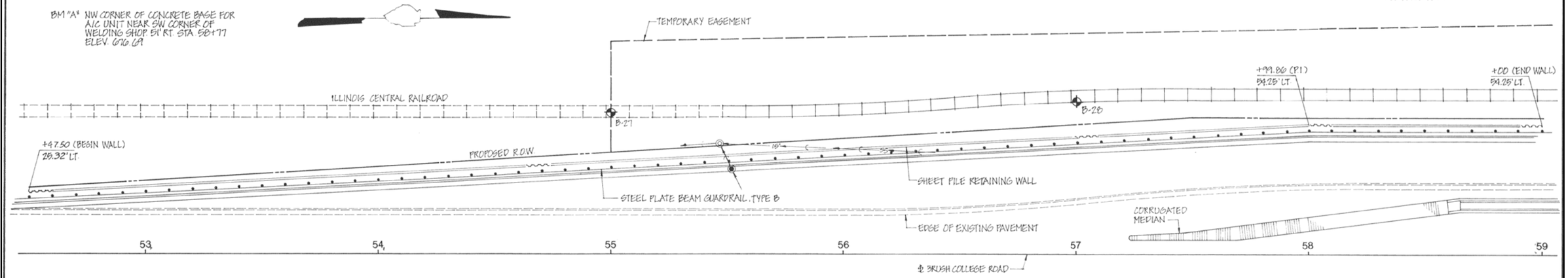

PLAN

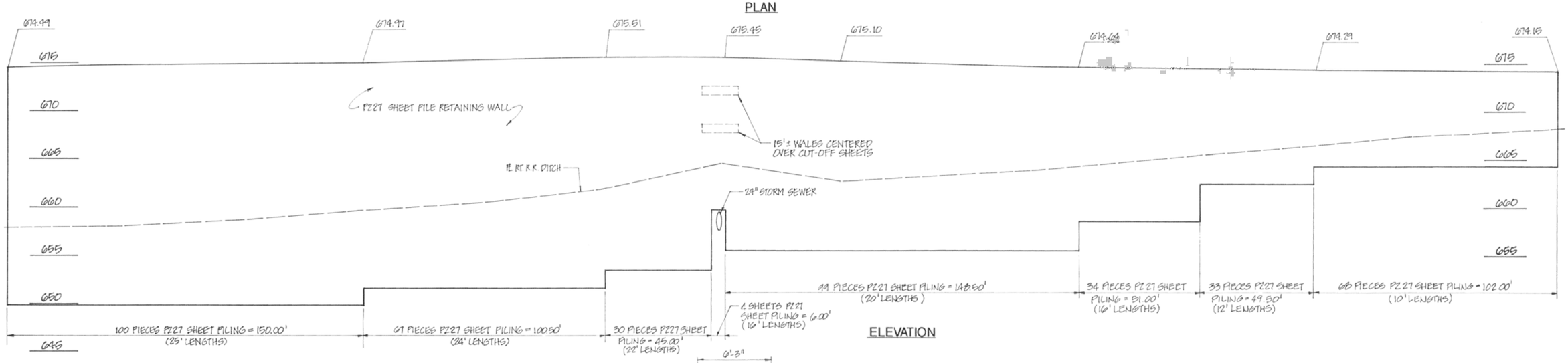

ELEVATION

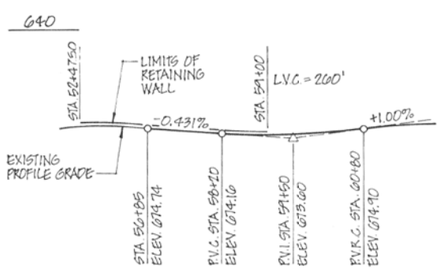

PROFILE GRADE
BRUSH COLLEGE ROAD

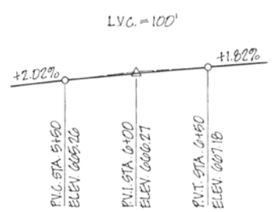

PROFILE GRADE
I.C. RAILROAD

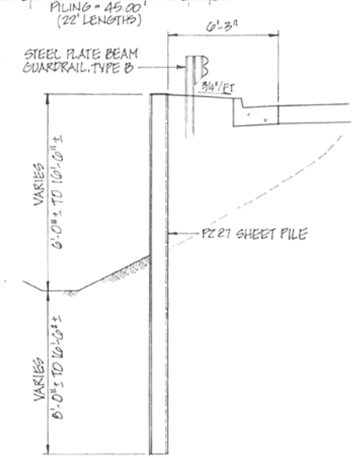

TYPICAL CROSS SECTION

DESIGN SPECIFICATIONS
1989 AASHTO, 1990 AND 1991 INTERIMS

DESIGN STRESSES
fs = 32,000 PSI (GR 50)

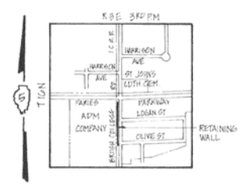

LOCATION SKETCH

FOR INFORMATION ONLY

STEEL SHEET PILE RETAINING WALL

BRUSH COLLEGE ROAD

F.A.U. 7448 (CH-1) SEC. 90-00119-00-PV

MACON COUNTY

HOMER L. CHASTAIN & ASSOCIATES
CONSULTING ENGINEERS
DECATUR, ILLINOIS

REVISIONS		
No.	DATE	DETAILS
1		
2		
3		
4		
5		
6		
7		
8		
9		
10		

DRAWN BY K. Kinney DATE 1-92
CHECKED BY DATE
BOOK NUMBER
PROJECT NO. 3570-9
SHEET NO.

design firm no. 184001036
whks engineers • planners • land surveyors

USER NAME = dheberling	DESIGNED - SDS	REVISED	
FILE NAME = 60603202_SN058W003.dgn	CHECKED - CWC	REVISED	
PLOT SCALE = 0.17' / in.	DRAWN - DLH	REVISED	
PLOT DATE = 10/30/2020	CHECKED - SDS	REVISED	

STATE OF ILLINOIS
DEPARTMENT OF TRANSPORTATION

EXISTING SHEET PILE RETAINING WALL
STRUCTURE NO. 058-W003

SHEET NO. SA-19 OF SA-25 SHEETS

F.A.U. RTE.	SECTION	COUNTY	TOTAL SHEETS	SHEET NO.
7448	09-00933-01-BR	MACON	996	538

CONTRACT NO. 6WGY(165)

ILLINOIS FED. AID PROJECT

FILE NAME: L:\Jobs\AECOM\6870 Brush College Road\CADD\CADD Sheets\60603202_SN058W003.dgn

LAST SAVED DATE: S-DATSAVEDDATES

LAST SAVED DATE: 5-DATSAVED/DATES

SKS ENGINEERS, LLC
2900 N. Martin Luther King Jr. Dr. Decatur, IL 62526

SOIL BORING LOG

Page 1 of 1
Project #: 012017
Date 08/16/11

ROUTE _____ DESCRIPTION BRUSH COLLEGE RD BRIDGE (SKS #012017) LOGGED BY EK, RC
SECTION _____ LOCATION DECATUR, IL
COUNTY MACON STRUCTURE NO. _____ (Exist) _____ (Prop.) _____
BORING NO. B-9 DRILLING METHOD HOLLOW STEM HAMMER TYPE 140# SAFETY HAMMER

Station 52+28.27
Offset 37.19' LT.
Ground Surface Elev. 673.5 (ft.)

Surface Water Elev. DRY (ft.)
Groundwater Elev.
First Encounter 655.5 (ft.)
Upon Completion 357.5 (ft.)
After ____ Hrs. ____ (ft.)

SOIL DESCRIPTION	ELEV (ft.)	DEPTH (ft.)	BLOWS /6"	UCS Qu (tsf)	MOIST (%)
9 1/4" CONCRETE					
SILTY CLAY LOAM - A-6 Mottled Brown, moist, stiff, low-medium plasticity, trace sand, trace gravel		5	2 4 5	2.4	26.6
			ST-2'		
SILTY CLAY LOAM - A-6 Brown-Gray, moist, stiff, low plasticity, trace sand, trace gravel - silt seam - sand lenses		10	4 6 9	2.2	20.7
			5 9 12	3.0	12.5
- very stiff			7 10 12	3.5	13.2
		15	6 9 16	2.4	13.9
- hard			17 55 5-1"		10.4
(*)free waler @ 18.0' - sand lenses		20	20 30 30-3"		8.8
END OF BORING @ 21.0 FT.	652.5				
		25			
		30			

SOIL DESCRIPTION	ELEV (ft.)	DEPTH (ft.)	BLOWS /6"	UCS Qu (tsf)	MOIST (%)

The Unconfined Compressive Strength (UCS) Failure Mode is indicated by (B-Bulge, S-Shear, P-Penetrometer).
The Standard Penetration Test (SPT) N Value is per (AASHTO T206)

BBS 137 (9/05)

SKS ENGINEERS, LLC
2900 N. Martin Luther King Jr. Dr. Decatur, IL 62526

SOIL BORING LOG

Page 1 of 1
Project #: 313516
Date 03/13/13

ROUTE _____ DESCRIPTION BRUSH COLLEGE ROAD LOGGED BY CH, CM
SECTION _____ LOCATION DECATUR, IL
COUNTY MACON STRUCTURE NO. _____ (Exist) _____ (Prop.) _____
BORING NO. B-10 DRILLING METHOD HOLLOW STEM HAMMER TYPE 140# SAFETY HAMMER

Station By URS
Offset By URS
Ground Surface Elev. 674.992 (ft.)

Surface Water Elev. - (ft.)
Groundwater Elev.
First Encounter 18.5' (ft.)
Upon Completion DRY (ft.)
After CI Hrs. 0 (ft.)

SOIL DESCRIPTION	ELEV (ft.)	DEPTH (ft.)	BLOWS /6"	UCS Qu (tsf)	MOIST (%)
SILTY CLAY - A-6 Gray-Mottled-Brown, moist, stiff, low plasticity			6 6 8		31.6
CLAY LOAM - A-4 Brown, moist, low plasticity		5		1.5	14.7
SILTY CLAY LOAM - A-4 Brown, moist, very stiff, low plasticity, trace gravel			6 9 10	1.5	15.2
		10	8 10 12	1.8	13.6
			6 11 13	1.3	14.1
		15	6 12 13	2.3	12.5
-hard 13" seam SAND- Brown, fine-coarse (*)free water @ 18.5'			23 38 22-4		
-hard		20	30 27 23	6.6	12.2
SILT - A-4 Gray, moist, hard, low plasticity, trace sand, trace gravel			14 26 21	2.1	14.3
		25	8 11 14	2.5	
CLAY - A-6 Gray, moist, very stiff, low plasticity, trace sand, trace gravel END OF BORING @ 26.0 FT.	648.992				
		30			

SOIL DESCRIPTION	ELEV (ft.)	DEPTH (ft.)	BLOWS /6"	UCS Qu (tsf)	MOIST (%)

The Unconfined Compressive Strength (UCS) Failure Mode is indicated by (B-Bulge, S-Shear, P-Penetrometer).
The Standard Penetration Test (SPT) N Value is per (AASHTO T206)

BBS 137 (9/05)

SKS ENGINEERS, LLC
2900 N. Martin Luther King Jr. Dr. Decatur, IL 62526

SOIL BORING LOG

Page 1 of 1
Project #: 313516
Date 04/05/13

ROUTE _____ DESCRIPTION BRUSH COLLEGE ROAD LOGGED BY CM, JM
SECTION _____ LOCATION DECATUR, IL
COUNTY MACON STRUCTURE NO. _____ (Exist) _____ (Prop.) _____
BORING NO. B-11 DRILLING METHOD HOLLOW STEM HAMMER TYPE 140# SAFETY HAMMER

Station By URS
Offset By URS
Ground Surface Elev. 674.629 (ft.)

Surface Water Elev. - (ft.)
Groundwater Elev.
First Encounter - (ft.)
Upon Completion DRY (ft.)
After CI Hrs. 0 (ft.)

SOIL DESCRIPTION	ELEV (ft.)	DEPTH (ft.)	BLOWS /6"	UCS Qu (tsf)	MOIST (%)
12" CONCRETE					
SLITY CLAY - A-6 Gray-Mottled-Brown, moist, stiff, medium plasticity			3 3 6	1.9	30.7
		5	2 4 5		23.4
SILTY CLAY LOAM - A-4 Brown, moist, low plasticity, little sand, trace gravel -stiff				1.3	18.0
		10	2 5 7	1.2	15.7
-very stiff			6 10 11	2.6	14.6
		15	8 11 15	3.2	13.5
CLAY - A-6 Gray, moist, hard, low plasticity, little sand, trace gravel			21 33 27	12.0	9.8
		20	20 15 21		9.7
			15 18 23		10.5
		25	15 19 22	7.1	10.5
END OF BORING @ 26.0 FT.	648.629				
		30			

SOIL DESCRIPTION	ELEV (ft.)	DEPTH (ft.)	BLOWS /6"	UCS Qu (tsf)	MOIST (%)

The Unconfined Compressive Strength (UCS) Failure Mode is indicated by (B-Bulge, S-Shear, P-Penetrometer).
The Standard Penetration Test (SPT) N Value is per (AASHTO T206)

BBS 137 (9/05)

FILE NAME: L:\Jobs\AECOM\60670 Brush College Road\CADD\CADD Sheets\60603202_SN058W003.dgn

design firm no. 184001036
whks engineers • planners • land surveyors

USER NAME = dheberling	DESIGNED - SDS	REVISED	
FILE NAME = 60603202_SN058W003.dgn	CHECKED - CWC	REVISED	
PLOT SCALE = 0.17' / in.	DRAWN - DLH	REVISED	
PLOT DATE = 10/30/2020	CHECKED - SDS	REVISED	

STATE OF ILLINOIS
DEPARTMENT OF TRANSPORTATION

BORINGS
STRUCTURE NO. 058-W003
SHEET NO. SA-20 OF SA-25 SHEETS

F.A.U. RTE.	SECTION	COUNTY	TOTAL SHEETS	SHEET NO.
7448	09-00933-01-BR	MACON	996	539

CONTRACT NO. 6WGY(165)
ILLINOIS FED. AID PROJECT

SKS ENGINEERS, LLC
2900 N. Martin Luther King Jr. Dr. Decatur, IL 62526

SOIL BORING LOG

Page 1 of 1
Project #: 313516
Date 03/12/13

ROUTE _____ DESCRIPTION BRUSH COLLEGE ROAD LOGGED BY CH, CM
SECTION _____ LOCATION DECATUR, IL
COUNTY MACON STRUCTURE NO. _____ (Exist) _____ (Prop.) _____
BORING NO. B-13 DRILLING METHOD HOLLOW STEM HAMMER TYPE 140# SAFETY HAMMER

Station By URS
Offset By URS
Ground Surface Elev. 674.506 (ft.)

Surface Water Elev. - (ft.)
Groundwater Elev.
First Encounter 19.5' (ft.)
Upon Completion 14.4' (ft.)
After CI Hrs. 0 (ft.)

SOIL DESCRIPTION	ELEV (ft.)	DEPTH (ft.)	BLOWS /6"	UCS Qu (tsf)	MOIST (%)
15" CONCRETE					
SAND - A-1-a Brown, moist, medium dense-dense, fine-coarse			12 17 13		
CRUSHED LIMESTONE- A-1		5	4 4 4		9.7
SILTY CLAY LOAM - A-4 Gray-Mottled-Brown, moist, stiff, low plasticity, little sand, trace gravel			5 6 7	1.0	17.6
		10	5 5 17		17.6
SILTY CLAY LOAM - A-4 Gray-Mottled-Brown, moist, stiff, low plasticity, little sand, trace gravel				2.3	12.5
		15	9 13 14	5.3	13.2
SILTY CLAY LOAM - A-4 Brown, moist, very stiff, low plasticity, trace sand, trace gravel -hard			20 24 33		10.4
(*)free water @ 19.5' sand lens		20	26 60		42.2
CLAY - A-6 Gray, moist, hard, low plasticity, trace sand, trace gravel			33 30 30-5	6.8	10.2
		25	17 23 32	12.9	11.5
END OF BORING @ 26.0 FT.	648.506				
		30			

The Unconfined Compressive Strength (UCS) Failure Mode is indicated by (B-Bulge, S-Shear, P-Penetrometer).
The Standard Penetration Test (SPT) N Value is per (AASHTO T206)

BBS 137 (9/05)

SKS ENGINEERS, LLC
2900 N. Martin Luther King Jr. Dr. Decatur, IL 62526

SOIL BORING LOG

Page 1 of 1
Project #: 313516
Date 03/14/13

ROUTE _____ DESCRIPTION BRUSH COLLEGE ROAD LOGGED BY CM
SECTION _____ LOCATION DECATUR, IL
COUNTY MACON STRUCTURE NO. _____ (Exist) _____ (Prop.) _____
BORING NO. B-14 DRILLING METHOD HOLLOW STEM HAMMER TYPE 140# SAFETY HAMMER

Station By URS
Offset By URS
Ground Surface Elev. 673.609 (ft.)

Surface Water Elev. - (ft.)
Groundwater Elev.
First Encounter 19.5' (ft.)
Upon Completion 11.6' (ft.)
After CI Hrs. 0 (ft.)

SOIL DESCRIPTION	ELEV (ft.)	DEPTH (ft.)	BLOWS /6"	UCS Qu (tsf)	MOIST (%)
18" CONCRETE					
SILTY CLAY - A-6 Dark Brown, moist, stiff, low plasticity, little sand			6 4 5		9.6
		5	2 3 7		24.8
SILTY CLAY LOAM - A-4 Gray-Mottled-Brown, moist, stiff, low plasticity, little sand, trace gravel			3 4 5	1.7	16.2
		10	2 3 5	1.7	16.9
SILTY CLAY LOAM - A-4 Brown, moist, firm-stiff, low plasticity, trace sand, trace gravel -very stiff			4 8 10	1.0	15.9
		15		2.2	13.0
SILTY CLAY LOAM - A-6 Brown, moist, low plasticity, trace sand, trace gravel -hard			8 14 24		14.2
(*)free water @ 19.5'		20	15 31 29		10.8
			11 17 21	2.1	11.6
CLAY - A-6 Gray, moist, very stiff, low plasticity, trace sand, trace gravel END OF BORING @ 26.0 FT.	647.609	25	8 13 16	3.0	12.6
		30			

The Unconfined Compressive Strength (UCS) Failure Mode is indicated by (B-Bulge, S-Shear, P-Penetrometer).
The Standard Penetration Test (SPT) N Value is per (AASHTO T206)

BBS 137 (9/05)

SKS ENGINEERS, LLC
2900 N. Martin Luther King Jr. Dr. Decatur, IL 62526

SOIL BORING LOG

Page 1 of 2
Project #: 313516
Date 04/01/13

ROUTE _____ **DESCRIPTION** BRUSH COLLEGE ROAD **LOGGED BY** CM
SECTION _____ **LOCATION** DECATUR, IL
COUNTY MACON **STRUCTURE NO.** _____ **(Exist)** _____ **(Prop.)** _____
BORING NO. B-15 **DRILLING METHOD** HOLLOW STEM **HAMMER TYPE** 140# SAFETY HAMMER

Station By URS
Offset By URS
Ground Surface Elev. 673.881 (ft.)

Surface Water Elev. - (ft.)
Groundwater Elev.
First Encounter 19.5' (ft.)
Upon Completion - (ft.)
After - Hrs. - (ft.)

SOIL DESCRIPTION	ELEV (ft.)	DEPTH (ft.)	BLOWS /6"	UCS Qu (tsf)	MOIST (%)
12" CONCRETE					
SILTY CLAY - A-6 Gray-Mottled-Brown, moist, stiff low plasticity			4 7 8		26.4
		5	5 6 8		22.9
SANDY LOAM - A-2-6 Dark Brown, moist, very loose, fine-coarse, little sand, trace gravel			1 2 2		17.0
		10	2 5 7	1.9	13.9
SILTY CLAY LOAM - A-4 Brown, moist, stiff, low plasticity, little sand -very stiff			6 8 11	3.2	13.2
		15	19 12 14	3.7	12.5
SILTY CLAY LOAM - A-6 Gray, moist, very stiff, low plasticity, little sand, trace gravel			8 11 11	3.2	12.5
		20	12 22 12		
SAND - A-1-b Brown, saturated, dense, fine-medium (*)free water @ 19.5'			6 22 29		
SANDY LOAM - A-2-6 Brown, wet, very dense, fine-coarse, trace gravel		25	6 32 30		
SAND - A-1-a Gray, wet, very dense, fine-coarse			13 35 25-3		10.4
CLAY - A-6 Gray, moist, hard, low plasticity, little sand, trace gravel		30	34 60-2		
SANDY LOAM - A-2-6 Gray, moist, very dense, fine-coarse, with gravel					

SOIL DESCRIPTION	ELEV (ft.)	DEPTH (ft.)	BLOWS /6"	UCS Qu (tsf)	MOIST (%)
CLAY - A-6 Gray, moist, hard, low plasticity, little sand, trace gravel		35	5 11 28		10.2
		40	19 38 22-3		11.0
		45	21 32 28-4	8.0	10.5
SAND - A-1-a Gray, dry, very dense, fine-coarse		50	32 50 10.1		
-dense		55	13 20 18		
-medium dense		60	5 8 12		
		65	10 12 9		

The Unconfined Compressive Strength (UCS) Failure Mode is indicated by (B-Bulge, S-Shear, P-Penetrometer).
The Standard Penetration Test (SPT) N Value is per (AASHTO T206)

BBS 137 (9/05)

SKS ENGINEERS, LLC
2900 N. Martin Luther King Jr. Dr. Decatur, IL 62526

SOIL BORING LOG

Page 2 of 2
Project #: 313516
Date 04/01/13

ROUTE _____ **DESCRIPTION** BRUSH COLLEGE ROAD **LOGGED BY** CM
SECTION _____ **LOCATION** DECATUR, IL
COUNTY MACON **STRUCTURE NO.** _____ **(Exist)** _____ **(Prop.)** _____
BORING NO. B-15 **DRILLING METHOD** HOLLOW STEM **HAMMER TYPE** 140# SAFETY HAMMER

Station By URS
Offset By URS
Ground Surface Elev. 673.881 (ft.)

Surface Water Elev. - (ft.)
Groundwater Elev.
First Encounter 19.5' (ft.)
Upon Completion - (ft.)
After - Hrs. - (ft.)

SOIL DESCRIPTION	ELEV (ft.)	DEPTH (ft.)	BLOWS /6"	UCS Qu (tsf)	MOIST (%)
CLAY - A-6 Gray, moist, hard, low plasticity, little sand trace gravel END OF BORING @ 71.0 FT.	602.881	70	15 16 25	1.7	18.7
		75			
		80			
		85			
		90			
		95			
		100			

SOIL DESCRIPTION	ELEV (ft.)	DEPTH (ft.)	BLOWS /6"	UCS Qu (tsf)	MOIST (%)

The Unconfined Compressive Strength (UCS) Failure Mode is indicated by (B-Bulge, S-Shear, P-Penetrometer).
The Standard Penetration Test (SPT) N Value is per (AASHTO T206)

BBS 137 (9/05)

LAST SAVED DATE S:\ASTSAVED\DATES

FILE NAME: L:\Jobs\AECOM\88710 Brush College Road\CADD\CADD Sheets\60603202_SN058W002.dgn

design firm no. 184001036 whks engineers + planners + land surveyors	USER NAME = dheberling	DESIGNED - SDS	REVISED	STATE OF ILLINOIS DEPARTMENT OF TRANSPORTATION
	FILE NAME = 60603202_SN058W003.dgn	CHECKED - CWC	REVISED	
	PLOT SCALE = 0.17 ' / in.	DRAWN - DLH	REVISED	
	PLOT DATE = 10/30/2020	CHECKED - SDS	REVISED	

BORINGS
STRUCTURE NO. 058-W003
SHEET NO. SA-22 OF SA-25 SHEETS

F.A.U. RTE.	SECTION	COUNTY	TOTAL SHEETS	SHEET NO.
7448	09-00933-01-BR	MACON	996	541

CONTRACT NO. 6WGY(165)
ILLINOIS FED. AID PROJECT

SKS ENGINEERS, LLC
2900 N. Martin Luther King Jr. Dr. Decatur, IL 62526

SOIL BORING LOG

Page 1 of 1
Project #: 916780
Date 2/20/20

ROUTE _____ DESCRIPTION BRUSH COLLEGE ROAD LOGGED BY GC
SECTION _____ LOCATION DECATUR, ILLINOIS
COUNTY MACON COUNTY STRUCTURE NO. _____ (Exist) _____ (Prop.) _____
BORING NO. B-22 DRILLING METHOD HOLLOW STEM HAMMER TYPE 140# SAFETY HAMMER

Station _____
Offset _____
Ground Surface Elev. 674.665 (ft.)

Surface Water Elev. _____ (ft.)
Groundwater Elev.
First Encounter 665.17 (ft.)
Upon Completion 663.47 (ft.)
After _____ Hrs. _____ (ft.)

SOIL DESCRIPTION	ELEV (ft.)	DEPTH (ft.)	BLOWS /6"	UCS Qu (tsf)	MOIST (%)
7" ASPHALT					
CLAY A-6 Mottled Brown, very moist, stiff, medium plasticity, trace sand			3 6 6		26.0
-firm		5	3 2 3	.45	32.4
-Shelby Tube					
CLAY LOAM A-6 Brown, very moist, very stiff, low plasticity, with sand trace gravel		10	5 9 10	0.58	17.9
			5 8 10	.78	14.8
		15	5 8 13	.65	14.9
			8 14 25	4.53	12.0
CLAY LOAM A-6 Brownish Gray, moist, hard, low plasticity, with sand trace gravel		20	17 55 5-1	3.7	12.2
SANDY CLAY LOAM A-2-4 Gray, moist, very dense, fine-coarse, trace gravel			60-6		9.0
		25			
	648.665		60-5		11.3
END OF BORING @ 26.0 FT.					
		30			

SOIL DESCRIPTION	ELEV (ft.)	DEPTH (ft.)	BLOWS /6"	UCS Qu (tsf)	MOIST (%)

The Unconfined Compressive Strength (UCS) Failure Mode is indicated by (B-Bulge, S-Shear, P-Penetrometer).
The Standard Penetration Test (SPT) N Value is per (AASHTO T206)

BBS 137 (9/05)

SKS ENGINEERS, LLC
2900 N. Martin Luther King Jr. Dr. Decatur, IL 62526

SOIL BORING LOG

Page 1 of 1
Project #: 916780
Date 02/12/20

ROUTE _____ DESCRIPTION BRUSH COLLEGE ROAD LOGGED BY GC/EE
SECTION _____ LOCATION DECATUR, ILLINOIS
COUNTY MACON COUNTY STRUCTURE NO. _____ (Exist) _____ (Prop.) _____
BORING NO. B-23 DRILLING METHOD HOLLOW STEM HAMMER TYPE 140# SAFETY HAMMER

Station _____
Offset _____
Ground Surface Elev. 675.958 (ft.)

Surface Water Elev. _____ (ft.)
Groundwater Elev.
First Encounter 668.46 (ft.)
Upon Completion - (ft.)
After _____ Hrs. _____ (ft.)

SOIL DESCRIPTION	ELEV (ft.)	DEPTH (ft.)	BLOWS /6"	UCS Qu (tsf)	MOIST (%)
SILTY CLAY A-4 Brown, very moist, stiff, low plasticity, trace sand			4 6 6	1.1	15.9
SILTY CLAY A-6 Brown, very moist, firm, low plasticity, trace gravel		5	2 2 3	0.6	22.5
SILTY CLAY A-6 Mottled Brown, very moist, soft-firm, low plasticity, trace sand			1 2 2	0.6	26.8
(*)free water @ 7.5'		10	2 2 3	0.4	18.3
CLAY LOAM A-6 Brown, moist, stiff, low plasticity, with sand trace gravel			3 3 7	0.99	12.9
SILT A-4 Brown, very moist, stiff-very stiff, low plasticity, trace sand		15	4 6 10	0.95	23.7
CLAY LOAM A-6 Gray, moist, hard, low plasticity, with sand trace gravel			60-6		13.7
SILT A-4 Gray, very moist, hard, low plasticity, trace sand		20	46 60-3	0.44	21.5
CLAY LOAM A-6 Gray, moist, hard, low plasticity, with sand trace gravel			36 40 20-2	8.66	10.3
		25	26		
	649.958		23 31	6.1	10.7
END OF BORING @ 26.0 FT.					
		30			

SOIL DESCRIPTION	ELEV (ft.)	DEPTH (ft.)	BLOWS /6"	UCS Qu (tsf)	MOIST (%)

The Unconfined Compressive Strength (UCS) Failure Mode is indicated by (B-Bulge, S-Shear, P-Penetrometer).
The Standard Penetration Test (SPT) N Value is per (AASHTO T206)

BBS 137 (9/05)

SKS ENGINEERS, LLC
2900 N. Martin Luther King Jr. Dr. Decatur, IL 62526

SOIL BORING LOG

Page 1 of 2
Project #: 916780
Date 03/2/20

ROUTE _____ DESCRIPTION BRUSH COLLEGE ROAD LOGGED BY GC/EE
SECTION _____ LOCATION DECATUR, ILLINOIS
COUNTY MACON COUNTY STRUCTURE NO. _____ (Exist) _____ (Prop.) _____
BORING NO. B-24 DRILLING METHOD MUD ROTARY HAMMER TYPE 140# SAFETY HAMMER

Station _____
Offset _____
Ground Surface Elev. 673.694 (ft.)

Surface Water Elev. _____ (ft.)
Groundwater Elev.
First Encounter 666.19 (ft.)
Upon Completion - (ft.)
After ____ Hrs. _____ (ft.)

SOIL DESCRIPTION	ELEV (ft.)	DEPTH (ft.)	BLOWS /6"	UCS Qu (tsf)	MOIST (%)
14" CONCRETE					
SAND A-1-a Brown, moist, medium dense, fine-medium, trace gravel			11 16 11		
-loose		5	4 4 5		
-very loose-loose (*)free water 7.5'			2 2 2		
-loose		10	4 3 3		
CLAY LOAM A-6 Brown, moist, very stiff, low plasticity, with sand trace gravel			3 12 18	1.24	14.2
		15			
SAND A-1-a Gray, saturated, medium dense, fine-medium, trace silt			4 11 17		
		20	7 9 13	3.30	11.5
CLAY LOAM A-6 Gray, moist, very stiff, low plasticity, with sand trace gravel -hard			8 11 25	5.56	10.1
		25	22 60-5		
-begin mud rotary drilling SAND A-1-a Gray, saturated, very dense, fine-coarse, trace gravel			3 20 40-5		11.6
CLAY LOAM A-6 Gray, moist, hard, low plasticity, with sand trace gravel		30	60-4		

SOIL DESCRIPTION	ELEV (ft.)	DEPTH (ft.)	BLOWS /6"	UCS Qu (tsf)	MOIST (%)
-stiff-very stiff		35	13 18 32	2.89	12.1
		40	4 7 9	2.68	13.7
-hard		45	9 48 12-1	7.3	11.2
		50	8 28 32-3		10.3
SAND A-1-a Gray, saturated, very dense, fine-coarse, trace gravel		55	25 27 32		
-dense		60	28 20 24		
-very dense		65	22 30 30-5		

The Unconfined Compressive Strength (UCS) Failure Mode is indicated by (B-Bulge, S-Shear, P-Penetrometer).
The Standard Penetration Test (SPT) N Value is per (AASHTO T206)

BBS 137 (9/05)

SKS ENGINEERS, LLC
2900 N. Martin Luther King Jr. Dr. Decatur, IL 62526

SOIL BORING LOG

Page 2 of 2
Project #: 916780
Date 03/2/20

ROUTE _____ DESCRIPTION BRUSH COLLEGE ROAD LOGGED BY GC/EE
SECTION _____ LOCATION DECATUR, ILLINOIS
COUNTY MACON COUNTY STRUCTURE NO. _____ (Exist) _____ (Prop.) _____
BORING NO. B-24 DRILLING METHOD MUD ROTARY HAMMER TYPE 140# SAFETY HAMMER

Station _____
Offset _____
Ground Surface Elev. 673.694 (ft.)

Surface Water Elev. _____ (ft.)
Groundwater Elev.
First Encounter 666.19 (ft.)
Upon Completion - (ft.)
After ____ Hrs. _____ (ft.)

SOIL DESCRIPTION	ELEV (ft.)	DEPTH (ft.)	BLOWS /6"	UCS Qu (tsf)	MOIST (%)
		70	60-6		
-dense		75	18 20 25		
-very dense		80	38 34 26-5		
		85	20 24 34		
		90	21 25 28		
		95	34 50 10-1		
		100			

SOIL DESCRIPTION	ELEV (ft.)	DEPTH (ft.)	BLOWS /6"	UCS Qu (tsf)	MOIST (%)
CLAY LOAM A-6 Gray, moist, hard, low plasticity, with sand trace gravel			60-5		10.3
-no recovery		105	60-4		13.9
-no recovery		110	60-1		
-no recovery		115	60-3		
-no recovery		120	60-2		
-no recovery -Shale begins at 125.5'		125	60-0		
SHALE Gray, moist, very dense, low plasticity, weathered	543.694	130	60-0		9.7
END OF BORING @ 130.0 FT.					

The Unconfined Compressive Strength (UCS) Failure Mode is indicated by (B-Bulge, S-Shear, P-Penetrometer).
The Standard Penetration Test (SPT) N Value is per (AASHTO T206)

BBS 137 (9/05)