PR ℄ JUG HANDLE CONNECTOR ROAD

POINT	STATION	OFFSET	ELEV	EX.
A	300+97.70	107.97 LT	688.61	
B	301+03.32	100.82 LT	688.46	
C	301+06.24	102.20 LT	688.50	
D	301+00.85	109.16 LT	688.65	
E	301+11.98	104.84 LT	688.80	
F	301+06.70	118.87 LT	688.90	
G	301+16.81	115.28 LT	689.02	
H	301+21.36	108.92 LT	688.92	
I	300+59.91	80.40 LT	689.87	
J	300+59.91	84.42 LT	689.94	
K	300+67.91	80.40 LT	689.75	
L	300+63.15	86.82 LT	689.88	
M	300+75.85	86.28 LT	689.26	
N	300+77.46	87.22 LT	689.18	
O	300+71.32	92.88 LT	689.37	
P	300+72.66	93.73 LT	689.29	

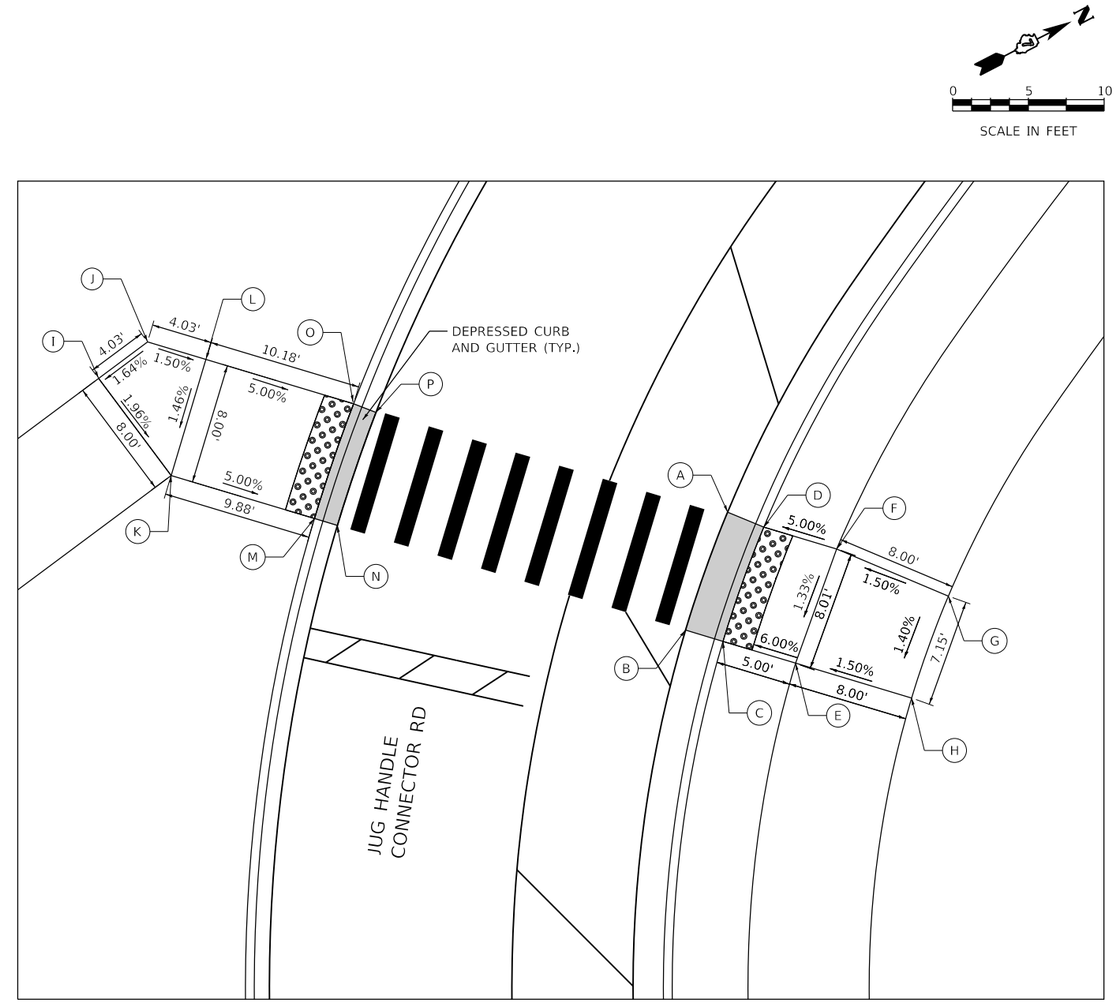

AECOM 345 EAST ASH AVENUE, SUITE B DECATUR, IL 62526 PHONE: (217) 775-6065	USER NAME = meron.asnake	DESIGNED -	REVISED -
		DRAWN -	REVISED -
	PLOT SCALE = 10.0000 ' / in.	CHECKED -	REVISED -
	PLOT DATE = 10/30/2020	DATE - 10/30/2020	REVISED -

STATE OF ILLINOIS
DEPARTMENT OF TRANSPORTATION

ADA RAMPS DETAILS
JUG HANDLE CONNECTOR AND BRUSH COLLEGE ROAD

SCALE: SCALE: | SHEET 3 OF 10 SHEETS | STA. TO STA.

F.A.U. RTE.	SECTION	COUNTY	TOTAL SHEETS	SHEET NO.
7448	09-00933-01-BR	MACON	996	151
		CONTRACT NO. XXXX(XXX)		
		ILLINOIS	FED. AID PROJECT	

MODEL: Default
FILE NAME: pw:\\aecom-na-pw.bentley.com:AECOM_DS16_NA\Documents\60603202-Brush College\900-CAD GIS\910_CAD\03_SHEETS\01_AECOM:ADA\60603202_SHT_ADA Ramp_04_Jug-03.dgn

0 5 10
SCALE IN FEET

PR ℄ BRUSH COLLEGE ROAD

POINT	STATION	OFFSET	ELEV	EX.
A	68+60.40	44.34 RT	676.70	
B	68+60.60	34.34 RT	676.55	
C	68+78.61	35.08 RT	675.11	
D	68+81.18	35.08 RT	675.17	
E	68+78.39	45.08 RT	675.26	
F	68+78.43	43.08 RT	675.23	
G	68+86.46	35.08 RT	675.17	
H	68+92.60	43.08 RT	674.90	
I	68+94.38	41.21 RT	674.90	
J	69+67.35	41.08 RT	672.90	
K	69+80.88	32.72 RT	672.62	
L	69+81.93	35.08 RT	673.62	
M	69+68.98	43.08 RT	672.90	
N	69+83.93	43.08 RT	673.20	
O	69+83.93	35.08 RT	672.66	
P	69+89.93	43.08 RT	672.74	
Q	69+89.93	35.08 RT	672.85	

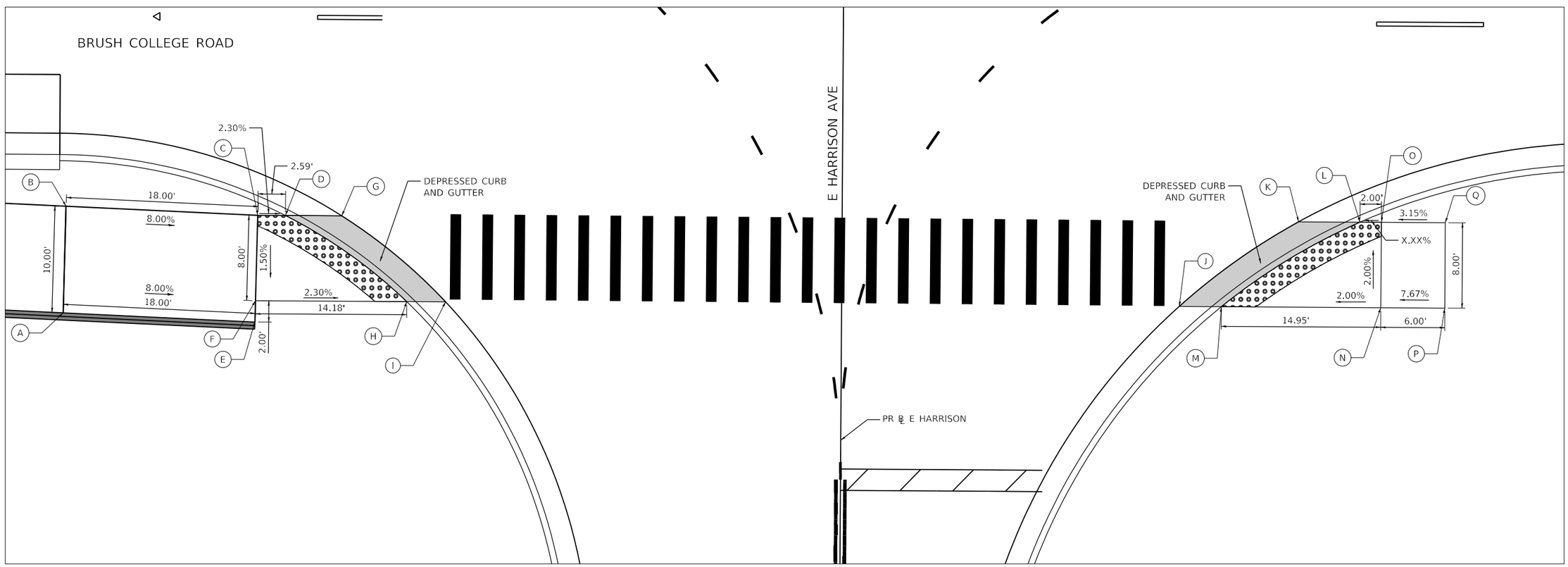

MODEL: Default
FILE NAME: pw:\\aecom-na-pw.bentley.com:AECOM_DS16_NA\Documents\60603202-Brush College\900-CAD GIS\910_CAD\03_SHEETS\01_AECOM\ADA\60603202_SHT_ADA Ramp_05_Brush-02.dgn

AECOM
345 EAST ASH AVENUE, SUITE B
DECATUR, IL 62526
PHONE: (217) 775-6065

USER NAME = busanskyl	DESIGNED -	REVISED -
	DRAWN -	REVISED -
PLOT SCALE = 10.0000 ' / in.	CHECKED -	REVISED -
PLOT DATE = 11/5/2020	DATE - 10/30/2020	REVISED -

STATE OF ILLINOIS
DEPARTMENT OF TRANSPORTATION

ADA RAMP DETAILS
BRUSH COLLEGE ROAD AND E HARRISON AVE (EAST)

SCALE: 1=5' | SHEET 4 OF 10 SHEETS | STA. TO STA.

F.A.U. RTE.	SECTION	COUNTY	TOTAL SHEETS	SHEET NO.
7448	09-00933-01-BR	MACON	996	152

CONTRACT NO. XXXX(XXX)

ILLINOIS | FED. AID PROJECT

PR ℄ JUG HANDLE CONNECTOR ROAD

POINT	STATION	OFFSET	ELEV	EX.
A	307+15.73	90.63 LT	673.57	
B	307+20.98	95.86 LT	673.71	
C	307+26.83	90.40 LT	673.59	
D	307+21.16	84.76 LT	673.44	
E	307+24.55	81.08 LT	673.19	
F	307+30.24	86.72 LT	673.34	
G	307+26.31	79.19 LT	673.14	
H	307+32.12	84.95 LT	673.30	
I	307+43.39	60.66 LT	673.65	
J	307+48.90	66.31 LT	673.77	
K	307+50.07	65.25 LT	673.85	
L	307+44.48	59.51 LT	673.73	
M	307+52.48	62.64 LT	673.89	
N	307+52.48	56.77 LT	673.94	
O	307+44.48	56.77 LT	673.78	
P	307+52.48	50.90 LT	674.03	
Q	307+44.48	50.90 LT	673.87	
R	307+52.48	48.90 LT	674.00	
S	307+44.48	46.69 LT	673.81	
T	307+53.18	46.39 LT	673.95	
U	307+45.14	44.19 LT	673.76	

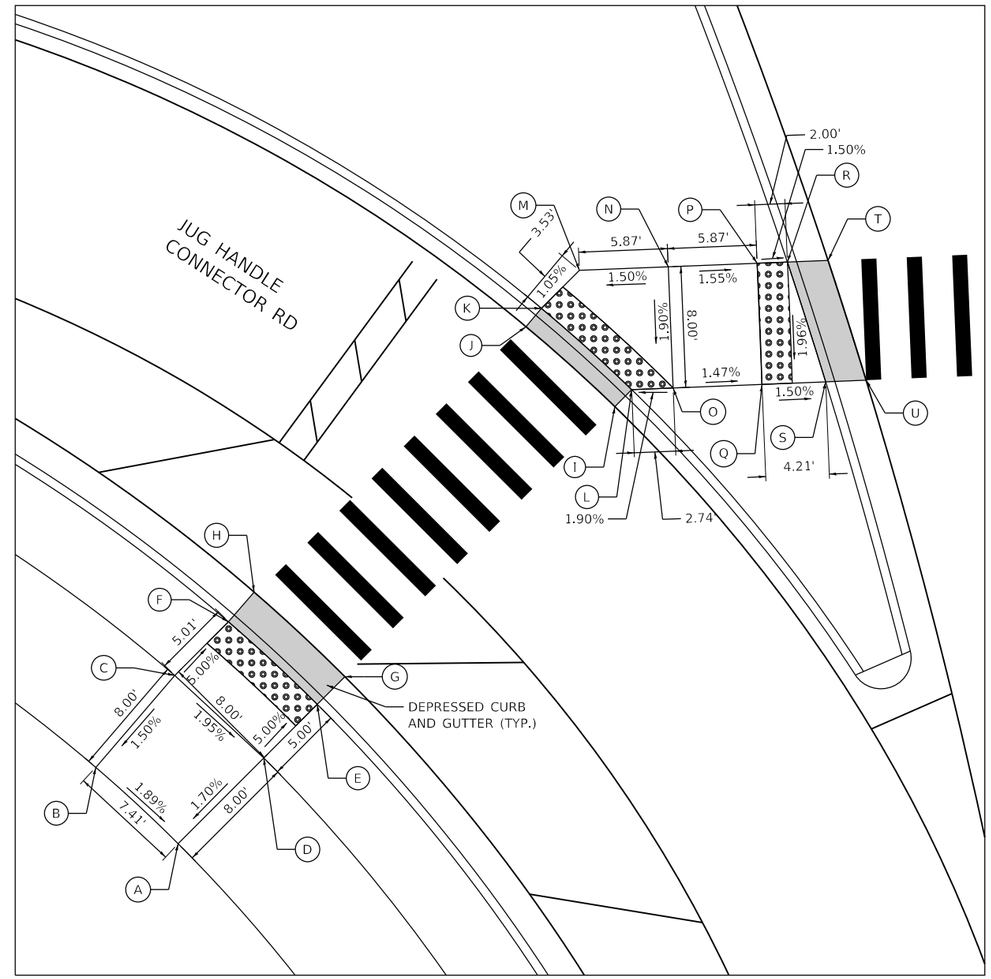

N

0 5 10

SCALE IN FEET

MODEL: Default
FILE NAME: pw:\\aecom-na-pw.bentley.com:AECOM_DS16_NA\Documents\60603202-Brush College\900-CAD GIS\910_CAD\03_SHEETS\01_AECOM\ADA\60603202_SHT_ADA Ramp_09_Faries04.dgn

AECOM
345 EAST ASH AVENUE, SUITE B
DECATUR, IL 62526
PHONE: (217) 775-6065

USER NAME = meron.asnake	DESIGNED - MA	REVISED -	
	DRAWN - MA	REVISED -	
PLOT SCALE = 10.0000 ' / in.	CHECKED - WBS	REVISED -	
PLOT DATE = 10/30/2020	DATE - 10/30/2020	REVISED -	

STATE OF ILLINOIS
DEPARTMENT OF TRANSPORTATION

ADA RAMPS DETAILS
JUG HANDLE CONNECTOR ROAD AND E FARIES PARKWAY

SCALE: 1=5' | SHEET 5 OF 10 SHEETS | STA. TO STA.

F.A.U. RTE.	SECTION	COUNTY	TOTAL SHEETS	SHEET NO.
7448	09-00933-01-BR	MACON	996	153

CONTRACT NO. XXXX(XXX)

ILLINOIS | FED. AID PROJECT

PR ℄ JUG HANDLE CONNECTOR ROAD

POINT	STATION	OFFSET	ELEV	EX.
A	307+52.47	30.00 RT	673.38	
B	307+44.47	30.00 RT	673.23	
C	307+52.47	33.21 RT	673.40	
D	307+44.47	33.50 RT	673.24	
E	307+52.47	38.21 RT	673.65	
F	307+44.47	38.50 RT	673.52	
G	307+52.47	46.21 RT	673.77	
H	307+44.47	46.51 RT	673.64	
I	307+44.47	55.56 RT	672.99	
J	307+52.47	55.56 RT	673.13	
K	307+52.47	61.72 RT	673.04	
L	307+44.47	58.37 RT	672.95	
M	307+43.34	59.49 RT	672.86	
N	307+49.88	64.27 RT	672.99	
O	307+48.68	65.30 RT	672.90	

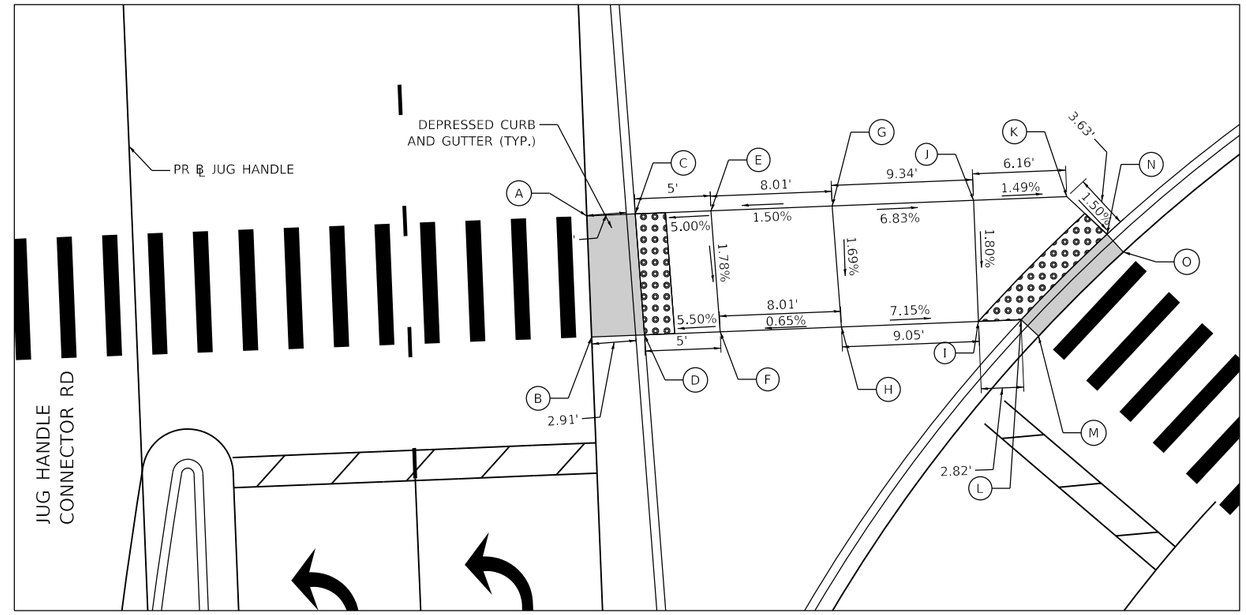

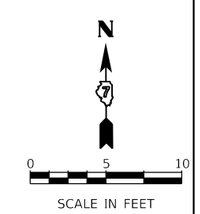

MODEL: Default
FILE NAME: pw:\\aecom-na-pw.bentley.com:AECOM_DS16_NA\Documents\60603202-Brush College\900-CAD GIS\910_CAD\03_SHEETS\01_AECOM\ADA\60603202_SHT_ADA Ramp_10_Faries-05.dgn

AECOM
345 EAST ASH AVENUE, SUITE B
DECATUR, IL 62526
PHONE: (217) 775-6065

USER NAME = meron.asnake	DESIGNED - MA	REVISED -	
	DRAWN - MA	REVISED -	
PLOT SCALE = 10.0000 ' / in.	CHECKED - WBS	REVISED -	
PLOT DATE = 10/30/2020	DATE - 10/30/2020	REVISED -	

STATE OF ILLINOIS
DEPARTMENT OF TRANSPORTATION

ADA RAMPS DETAILS
BRUSH COLLEGE ROAD

SCALE: 1=5' | SHEET 6 OF 10 SHEETS | STA. TO STA.

F.A.U. RTE.	SECTION	COUNTY	TOTAL SHEETS	SHEET NO.
7448	09-00933-01-BR	MACON	996	154

CONTRACT NO. XXXX(XXX)

ILLINOIS | FED. AID PROJECT

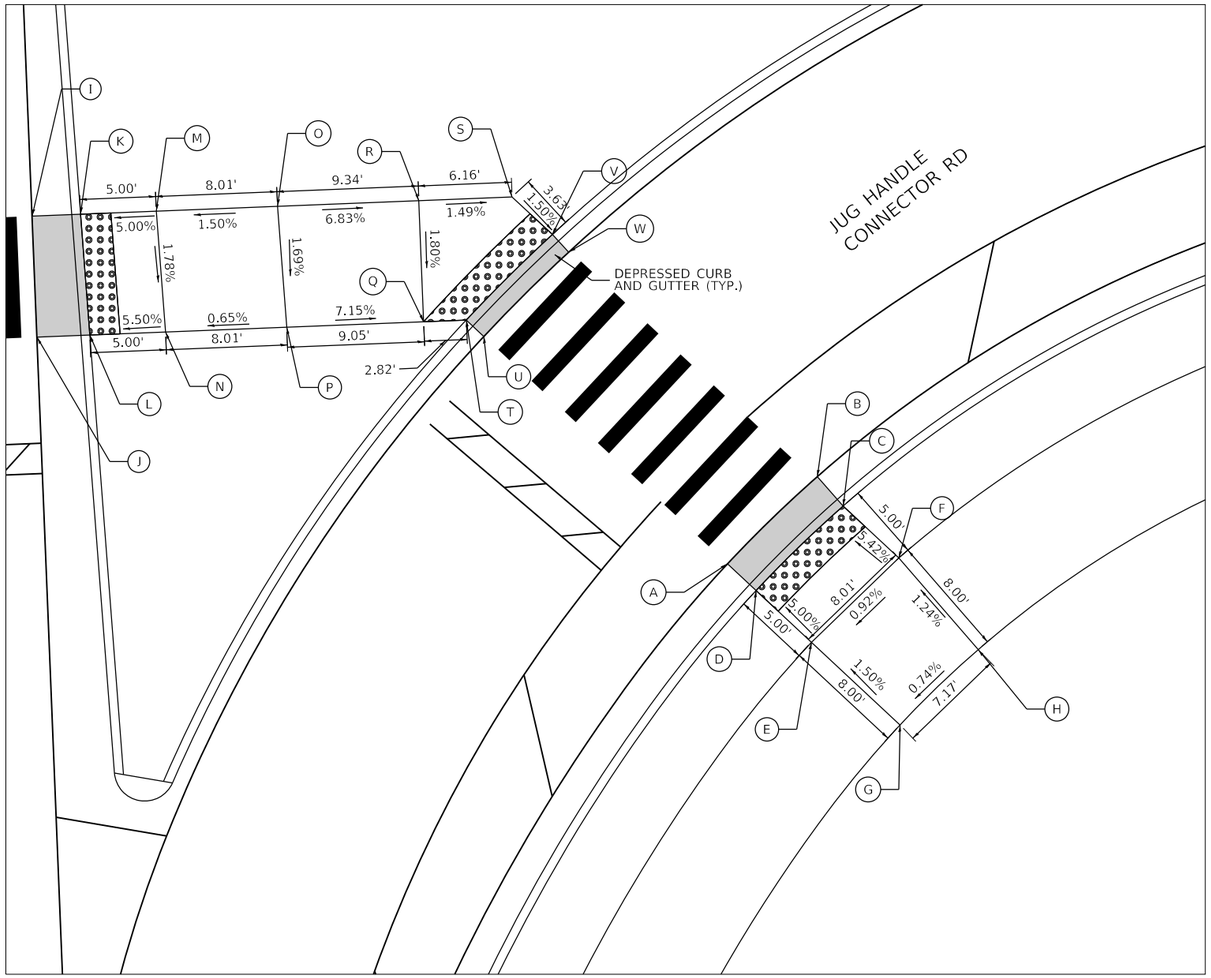

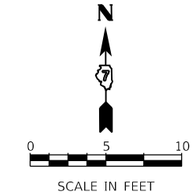

PR ℄ JUG HANDLE CONNECTOR ROAD

POINT	STATION	OFFSET	ELEV	EX.
A	307+27.70	74.95 RT	672.42	
B	307+33.21	81.11 RT	672.47	
C	307+31.20	82.73 RT	672.52	
D	307+25.86	76.77 RT	672.47	
E	307+22.30	80.28 RT	672.72	
F	307+27.63	86.27 RT	672.79	
G	307+16.61	85.91 RT	672.84	
H	307+21.38	91.26 RT	672.89	
I	307+52.47	30.00 RT	673.38	
J	307+44.47	30.00 RT	673.23	
K	307+52.47	33.21 RT	673.40	
L	307+44.47	33.50 RT	673.24	
M	307+52.47	38.21 RT	673.65	
N	307+44.47	38.50 RT	673.52	
O	307+52.47	46.21 RT	673.77	
P	307+44.47	46.51 RT	673.64	
Q	307+44.47	55.56 RT	672.99	
R	307+52.47	55.56 RT	673.13	
S	307+52.47	61.72 RT	673.04	
T	307+44.47	58.37 RT	672.95	
U	307+43.34	59.49 RT	672.86	
V	307+49.88	64.27 RT	672.99	
W	307+48.68	65.30 RT	672.90	

MODEL: Default
FILE NAME: pw:\\aecomna-pw.bentley.com:AECOM_DS16_NA\Documents\60603202-Brush College\900-CAD GIS\910_CAD\03_SHEETS\01_AECOM\ADA\60603202_SHT_ADA Ramp_11_Faries06.dgn

AECOM
345 EAST ASH AVENUE, SUITE B
DECATUR, IL 62526
PHONE: (217) 775-6065

USER NAME = meron.asnake	DESIGNED - MA	REVISED -	
	DRAWN - MA	REVISED -	
PLOT SCALE = 10.0000 ' / in.	CHECKED - WBS	REVISED -	
PLOT DATE = 10/30/2020	DATE - 10/30/2020	REVISED -	

STATE OF ILLINOIS
DEPARTMENT OF TRANSPORTATION

ADA RAMPS DETAILS
JUG HANDLE CONNECTOR ROAD AND E FARIES PARKWAY

SCALE: 1=5' | SHEET 7 OF 10 SHEETS | STA. TO STA.

F.A.U. RTE.	SECTION	COUNTY	TOTAL SHEETS	SHEET NO.
7448	09-00933-01-BR	MACON	996	155

CONTRACT NO. XXXX(XXX)

ILLINOIS | FED. AID PROJECT

PR B E FARIES PARKWAY

POINT	STATION	OFFSET	ELEV	EX.
A	222+86.92	34.60' RT	665.75	
B	222+86.91	42.60' RT	665.90	
C	222+94.92	34.57' RT	665.62	
D	222+94.91	42.57' RT	665.78	
E	222+99.92	34.59' RT	665.37	
F	222+99.91	42.59' RT	665.53	
G	223+01.92	34.59' RT	665.33	
H	223+07.20	34.58' RT	665.28	
I	223+13.44	42.64' RT	665.47	
J	223+17.09	42.64' RT	665.43	
K	223+96.96	42.58' RT	665.07	
L	224+00.65	42.58' RT	665.12	
M	224+06.87	34.58' RT	665.22	
N	224+12.20	34.58' RT	665.27	
O	224+14.21	34.58' RT	665.30	
P	224+14.21	42.58' RT	665.25	
Q	224+19.24	34.58' RT	665.55	
R	224+19.25	42.58'RT	665.50	
S	224+27.28	34.56' RT	665.67	
T	224+27.30	42.56' RT	665.62	

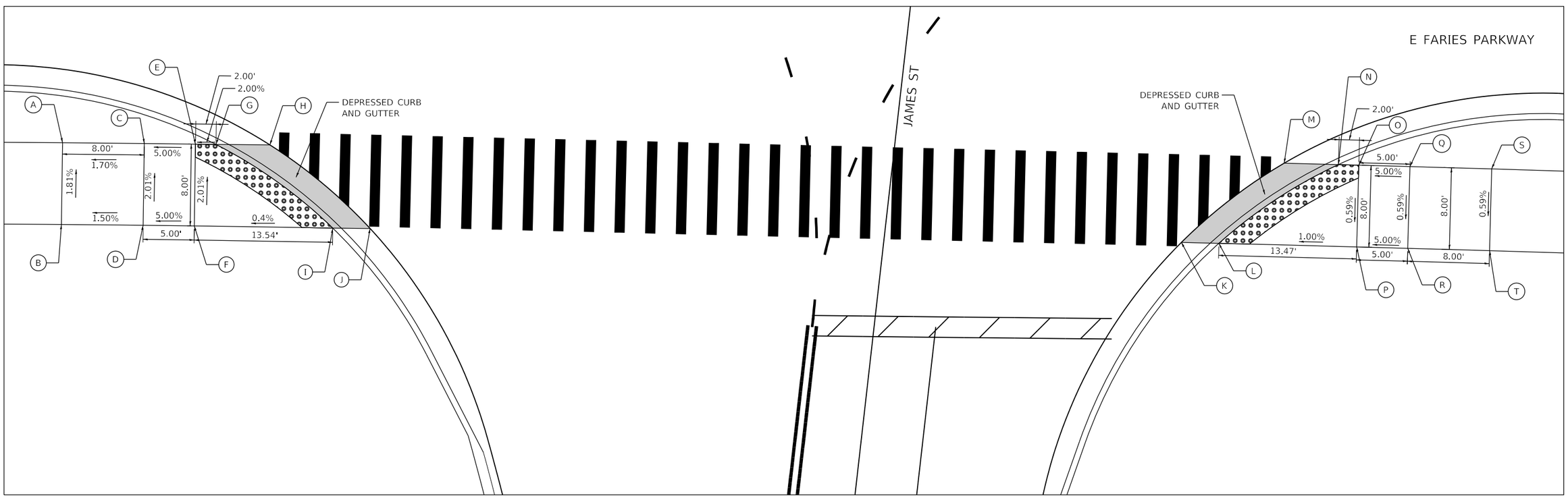

MODEL: Default
FILE NAME: pw:\\aecom-na-pw.bentley.com:AECOM_DS16_NA\Documents\60603202-Brush College\900-CAD GIS\910_CAD\03_SHEETS\01_AECOM\ADA\60603202_SHT_ADA Ramp_14_Faries<09.dgn

AECOM
345 EAST ASH AVENUE, SUITE B
DECATUR, IL 62526
PHONE: (217) 775-6065

USER NAME = meron.asnake	DESIGNED - MA	REVISED -	
	DRAWN - MA	REVISED -	
PLOT SCALE = 10.0000 ' / in.	CHECKED - WBS	REVISED -	
PLOT DATE = 10/30/2020	DATE - 10/30/2020	REVISED -	

STATE OF ILLINOIS
DEPARTMENT OF TRANSPORTATION

ADA RAMPS DETAILS
E FARIES PARKWAY AND JAMES STREET

SCALE: 1=5' | SHEET 8 OF 10 SHEETS | STA. TO STA.

F.A.U. RTE.	SECTION	COUNTY	TOTAL SHEETS	SHEET NO.
7448	09-00933-01-BR	MACON	996	156
		CONTRACT NO. XXXX(XXX)		
	ILLINOIS	FED. AID PROJECT		

PR ℄ JUG HANDLE CONNECTOR ROAD

POINT	STATION	OFFSET	ELEV	EX.
A	XX+XX.XX	XX.XX' RT/LT	XXX.XX	
B	XX+XX.XX	XX.XX' RT/LT	XXX.XX	
C	XX+XX.XX	XX.XX' RT/LT	XXX.XX	
D	XX+XX.XX	XX.XX' RT/LT	XXX.XX	
E	XX+XX.XX	XX.XX' RT/LT	XXX.XX	
F	XX+XX.XX	XX.XX' RT/LT	XXX.XX	
G	XX+XX.XX	XX.XX' RT/LT	XXX.XX	
H	XX+XX.XX	XX.XX' RT/LT	XXX.XX	
I	XX+XX.XX	XX.XX' RT/LT	XXX.XX	
J	XX+XX.XX	XX.XX' RT/LT	XXX.XX	
K	XX+XX.XX	XX.XX' RT/LT	XXX.XX	
L	XX+XX.XX	XX.XX' RT/LT	XXX.XX	

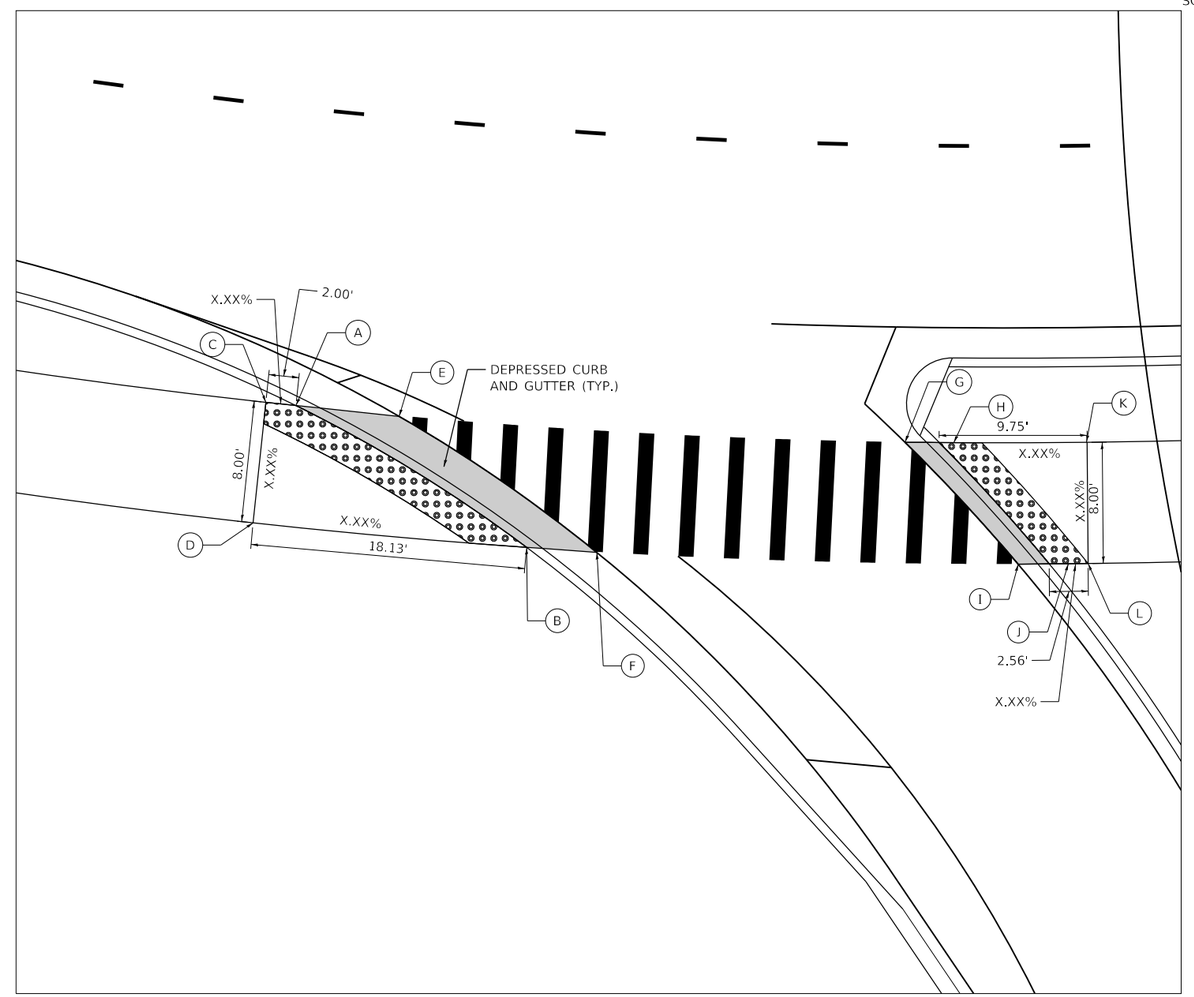

MODEL: Default
FILE NAME: pw:\\aecom-na-pw.bentley.com:AECOM_DS16_NA\Documents\60603202-Brush College\900-CAD GIS\910_CAD\03_SHEETS\01_AECOM\ADA\60603202_SHT_ADA Ramp_17_Jug-04.dgn

AECOM
345 EAST ASH AVENUE, SUITE B
DECATUR, IL 62526
PHONE: (217) 775-6065

USER NAME = meron.asnake	DESIGNED - MA	REVISED -	
	DRAWN - MA	REVISED -	
PLOT SCALE = 10.0000 ' / in.	CHECKED - WBS	REVISED -	
PLOT DATE = 10/30/2020	DATE - 10/30/2020	REVISED -	

STATE OF ILLINOIS
DEPARTMENT OF TRANSPORTATION

ADA RAMPS DETAILS
JUG HANDLE CONNECTOR ROAD AND LOGAN STREET

SCALE: 1=5' | SHEET 9 OF 10 SHEETS | STA. TO STA.

F.A.U. RTE.	SECTION	COUNTY	TOTAL SHEETS	SHEET NO.
7448	09-00933-01-BR	MACON	996	157
		CONTRACT NO. XXXX(XXX)		
	ILLINOIS	FED. AID PROJECT		

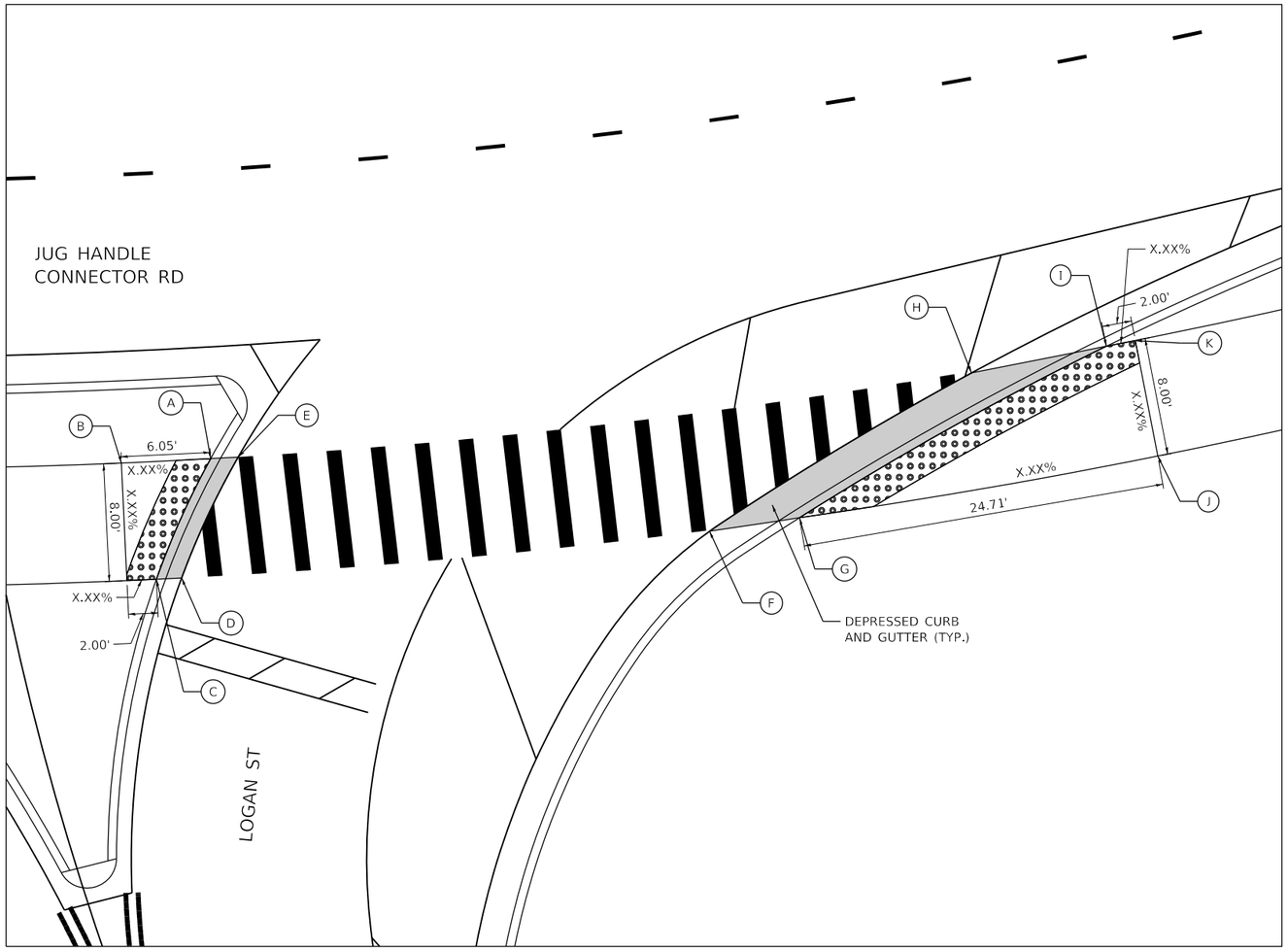

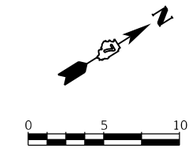

PR ℄ JUG HANDLE CONNECTOR ROAD

POINT	STATION	OFFSET	ELEV	EX.
A	XX+XX.XX	XX.XX' RT/LT	XXX.XX	
B	XX+XX.XX	XX.XX' RT/LT	XXX.XX	
C	XX+XX.XX	XX.XX' RT/LT	XXX.XX	
D	XX+XX.XX	XX.XX' RT/LT	XXX.XX	
E	XX+XX.XX	XX.XX' RT/LT	XXX.XX	
F	XX+XX.XX	XX.XX' RT/LT	XXX.XX	
G	XX+XX.XX	XX.XX' RT/LT	XXX.XX	
H	XX+XX.XX	XX.XX' RT/LT	XXX.XX	
I	XX+XX.XX	XX.XX' RT/LT	XXX.XX	
J	XX+XX.XX	XX.XX' RT/LT	XXX.XX	
K	XX+XX.XX	XX.XX' RT/LT	XXX.XX	

MODEL: Default
FILE NAME: pw:\\aecom-na-pw.bentley.com:AECOM_DS16_NA1\Documents\60603202-Brush College\900-CAD GIS\910_CAD\03_SHEETS\01_AECOM\ADA\60603202_SHT_ADA Ramp_18_Jug-05.dgn

AECOM
345 EAST ASH AVENUE, SUITE B
DECATUR, IL 62526
PHONE: (217) 775-6065

USER NAME = meron.asnake	DESIGNED - MA	REVISED -	
	DRAWN - MA	REVISED -	
PLOT SCALE = 10.0000 ' / in.	CHECKED - WBS	REVISED -	
PLOT DATE = 10/30/2020	DATE - 10/30/2020	REVISED -	

STATE OF ILLINOIS
DEPARTMENT OF TRANSPORTATION

ADA RAMPS DETAILS
JUG HANDLE CONNECTOR ROAD AND LOGAN STREET

SCALE: 1=5' | SHEET 10 OF 10 SHEETS | STA. TO STA.

F.A.U. RTE.	SECTION	COUNTY	TOTAL SHEETS	SHEET NO.
7448	09-00933-01-BR	MACON	996	158

CONTRACT NO. XXXX(XXX)

ILLINOIS | FED. AID PROJECT

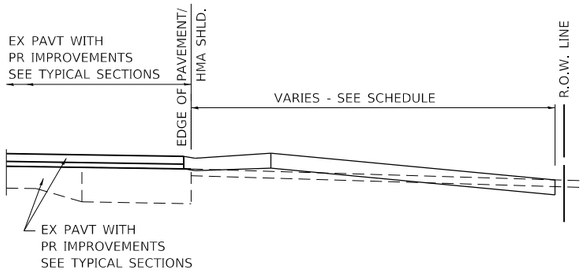

SECTION A-A

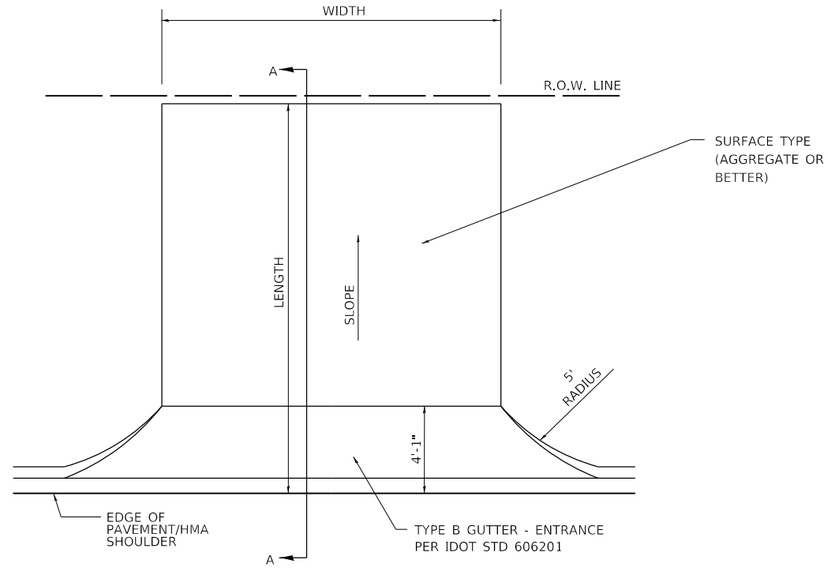

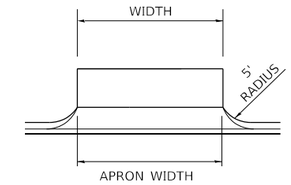

ENTRANCE TYPE 1

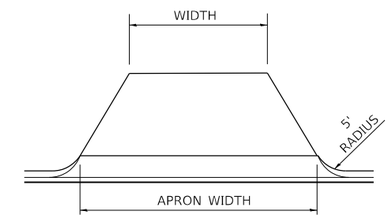

ENTRANCE TYPE 2

ENTRANCE IMPROVEMENT SCHEDULE

LOCATION	CLASS OF ENTRANCE	MATERIAL TYPE	APRON WIDTH	ENTRANCE TYPE	ENTRANCE WIDTH	LENGTH (FROM EDGE OF PVT/ HMA SHLD TO LIMITS OF IMPROVEMENT)	HMA DRIVEWAY PAVEMENT 4"	AGGREGATE BASE COURSE TY A (8")	AGGREGATE SURFACE COURSE TY A, 6"
(LT / RT) (STA) (+)	(FE / PE / CE / MB) (RURAL / URBAN)	(EARTH / AGG. / HMA / P.C.C.)				FOOT	SQ. YD.	TON	SQ. YD.
E LOGAN (RT) STA 601+55	CE / URBAN	AGG.	16	1	16	19.5			27.3
E LOGAN (LT) STA 602+02	CE / URBAN	AGG.	52.2	2	40	16.7			66.8
E LOGAN (RT) STA 602+35	CE / URBAN	AGG.	12	1	12	19.2			20.1
E LOGAN (RT) STA 603+07	CE / URBAN	AGG.	84	1	84	10.8			62.3
E LOGAN (LT) STA 604+78	CE / URBAN	AGG.	56.4	2	40	17.8			72.7
E LOGAN (RT) STA 604+88	CE / URBAN	AGG.	16	1	16	18.2			25.1
E LOGAN (RT) STA 606+12	CE / URBAN	AGG.	16	1	16	17.7			24.2
E LOGAN (RT) STA 606+89	CE / URBAN	AGG.	16	1	16	17.4			23.7
E LOGAN (LT) STA 607+28	CE / URBAN	HMA	38.8	2	21.2	18.7	48.9	15.4	
E LOGAN (RT) STA 607+99	CE / URBAN	AGG.	16	1	16	17			22.9
E LOGAN (LT) STA 608+57	CE / URBAN	AGG.	24	1	22.9	20.6			40.8
E LOGAN (RT) STA 608+78	CE / URBAN	AGG.	20	1	20	16.7			28.0
N JAMES (RT) STA 404+76	CE / URBAN	AGG.	50.3		20	45			128.0
N JAMES (LT) STA 405+81	CE / URBAN	AGG.	35	1	35	25			81.8
E HARRISON (RT) STA 802+49	CE / URBAN	AGG.	16	1	25.4	19			34.3
E HARRISON (LT) STA 802+55	CE / URBAN	AGG.	20	1	20	10			13.1
TOTAL =									

MODEL: Default
FILE NAME: pw:\\aecom-na-pw.bentley.com:AECOM_DS16_NA\Documents\60603202-Brush College\900-CAD GIS\910_CAD\03_SHEETS\02_VHHS\Roadway Details\60603202_SHT_entrance details.dgn

design firm no. 184001036 whks engineers + planners + land surveyors

USER NAME = rallender	DESIGNED -	REVISED -
	DRAWN -	REVISED -
PLOT SCALE = 40.000 ' / in.	CHECKED -	REVISED -
PLOT DATE = 10/30/2020	DATE - 10/30/2020	REVISED -

STATE OF ILLINOIS
DEPARTMENT OF TRANSPORTATION

ENTRANCE DETAILS

SCALE: SHEET 1 OF 1 SHEETS STA. TO STA.

F.A.U. RTE.	SECTION	COUNTY	TOTAL SHEETS	SHEET NO.
7448	09-00933-01-BR	MACON	996	159

CONTRACT NO. XXXX(XXX)

ILLINOIS FED. AID PROJECT

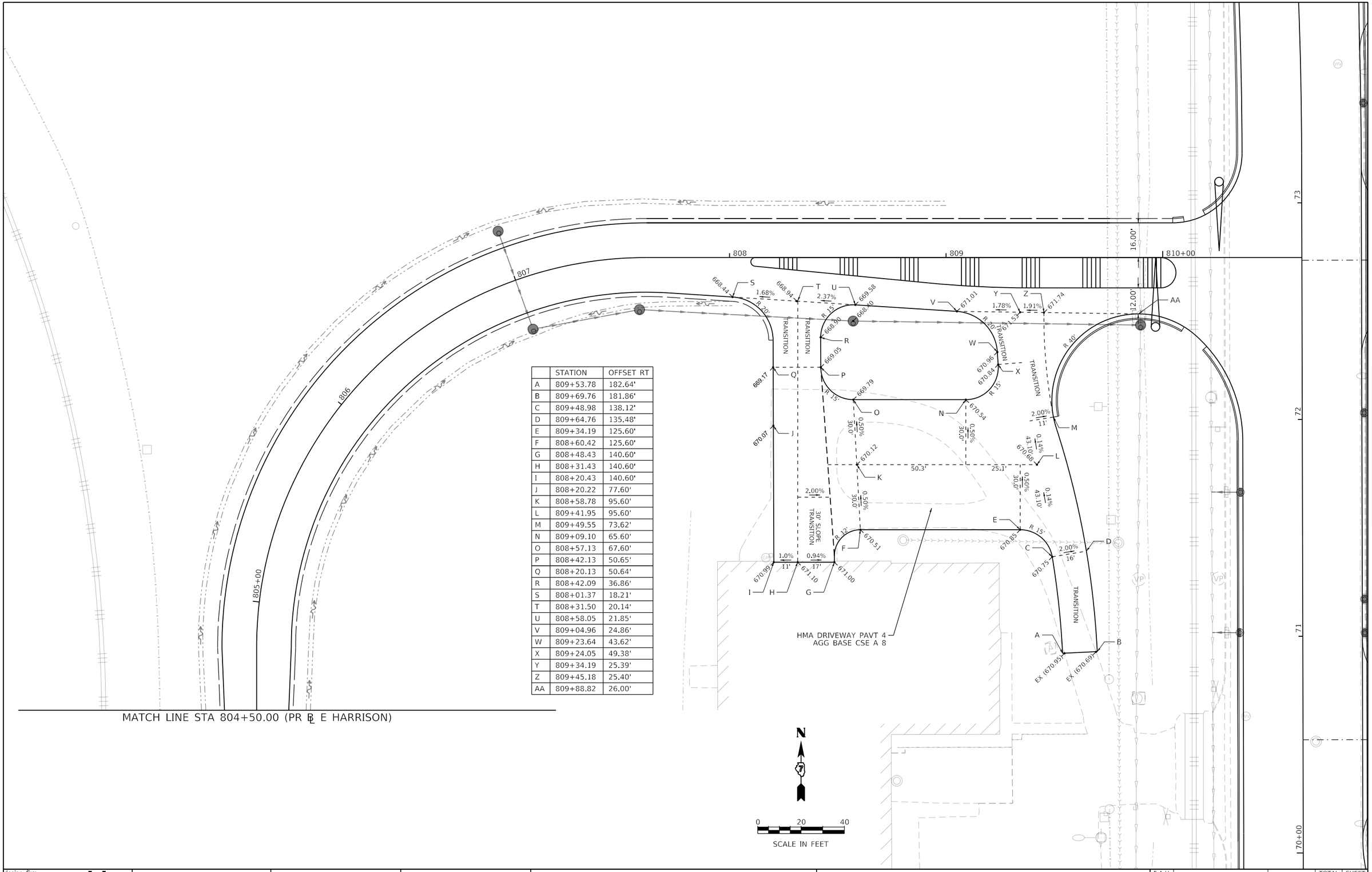

	STATION	OFFSET RT
A	809+53.78	182.64'
B	809+69.76	181.86'
C	809+48.98	138.12'
D	809+64.76	135.48'
E	809+34.19	125.60'
F	808+60.42	125.60'
G	808+48.43	140.60'
H	808+31.43	140.60'
I	808+20.43	140.60'
J	808+20.22	77.60'
K	808+58.78	95.60'
L	809+41.95	95.60'
M	809+49.55	73.62'
N	809+09.10	65.60'
O	808+57.13	67.60'
P	808+42.13	50.65'
Q	808+20.13	50.64'
R	808+42.09	36.86'
S	808+01.37	18.21'
T	808+31.50	20.14'
U	808+58.05	21.85'
V	809+04.96	24.86'
W	809+23.64	43.62'
X	809+24.05	49.38'
Y	809+34.19	25.39'
Z	809+45.18	25.40'
AA	809+88.82	26.00'

MODEL: Default
FILE NAME: pw:\\aecom-na-pw.bentley.com:AECOM_DS16_NA\Documents\60603202-Brush College\900-CAD GIS\910_CAD\03_SHEETS\02_VHKS\Roadway Details\60603202_SHT_IntersectionGrading_17_Parking lot-01.dgn

design firm no. 184001036
whks
engineers + planners + land surveyors

USER NAME = rallender	DESIGNED -	REVISED -
	DRAWN -	REVISED -
PLOT SCALE = 40.0000 ' / in.	CHECKED -	REVISED -
PLOT DATE = 10/30/2020	DATE - 10/30/2020	REVISED -

STATE OF ILLINOIS
DEPARTMENT OF TRANSPORTATION

E HARRISON AVENUE (WEST LEG)&(PARKING LOT)
INTERSECTION GRADING DETAIL

SCALE: 1"=20' | SHEET 1 OF 1 SHEETS | STA. 804+50.00 TO STA. 809+00.00

F.A.U. RTE.	SECTION	COUNTY	TOTAL SHEETS	SHEET NO.
7448	09-00933-01-BR	MACON	996	160
		CONTRACT NO. XXXX(XXX)		
		ILLINOIS	FED. AID PROJECT	

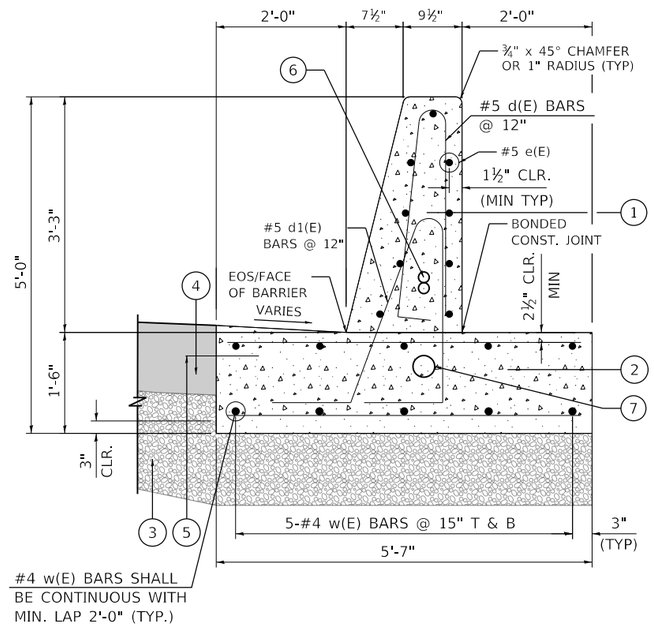

CONCRETE BARRIER WALL (SPECIAL NO. 2)

STA 49+00.00 TO STA 51+99.97, LT (PR ℄ BRUSH)
STA 51+75.56 TO STA 53+68.78, RT (PR ℄ BRUSH)

LEGEND:

1. CONCRETE BARRIER WALL (SPECIAL NO. 2)
2. CONCRETE BARRIER BASE (SPECIAL NO. 1)
3. AGGREGATE BASE COURSE, TYPE B 12"
4. PORTLAND CEMENT CONCRETE PAVEMENT, 10" (JOINTED)
5. EPOXY COATED TIE BARS, NO. 8, 2'-6" LONG @ 2'-0" C-C
6. (ADJACENT TO PCC PAVEMENT OR SHOULDER) INCLUDED IN THE COST OF CONCRETE BARRIER BASE OF VARIOUS TYPES
7. 2-2" DIAMETER CONDUITS IN BARRIER, LOCATIONS AS SPECIFIED IN ELECTRICAL OR ITS PLANS
   1-4" DIAMETER CONDUIT, LOCATIONS AS SPECIFIED IN ELECTRICAL OR ITS PLANS

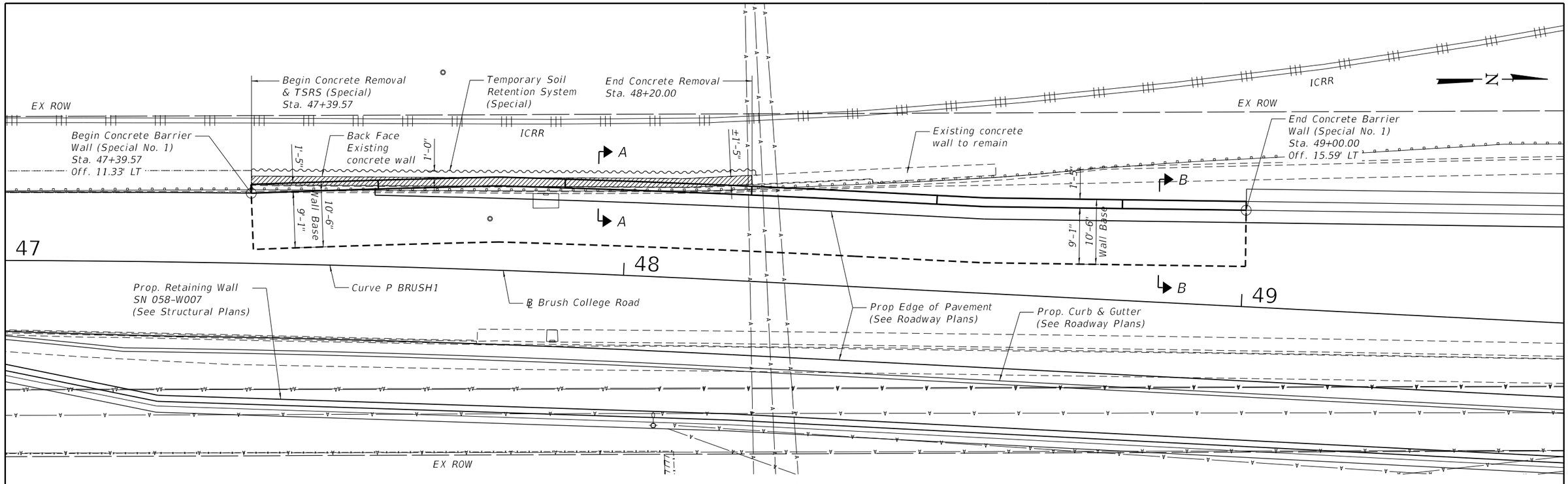

PLAN

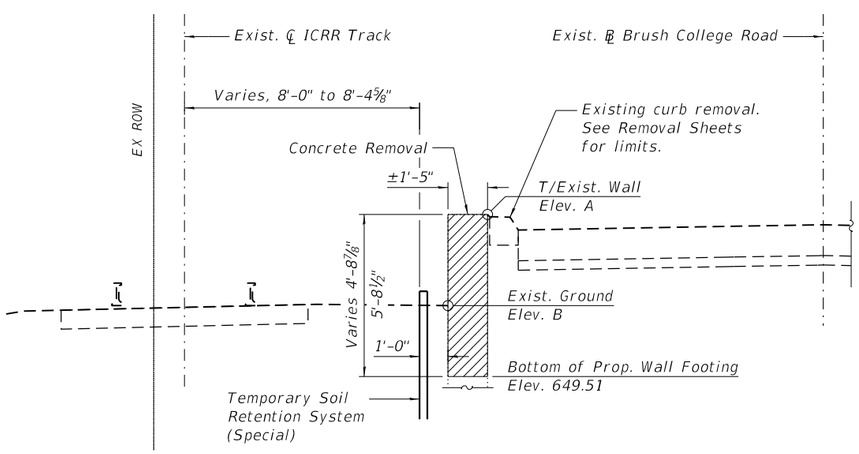

SECTION A-A

Sta. 47+39.59 to Sta. 48+20.00
Showing partial removal of existing concrete wall

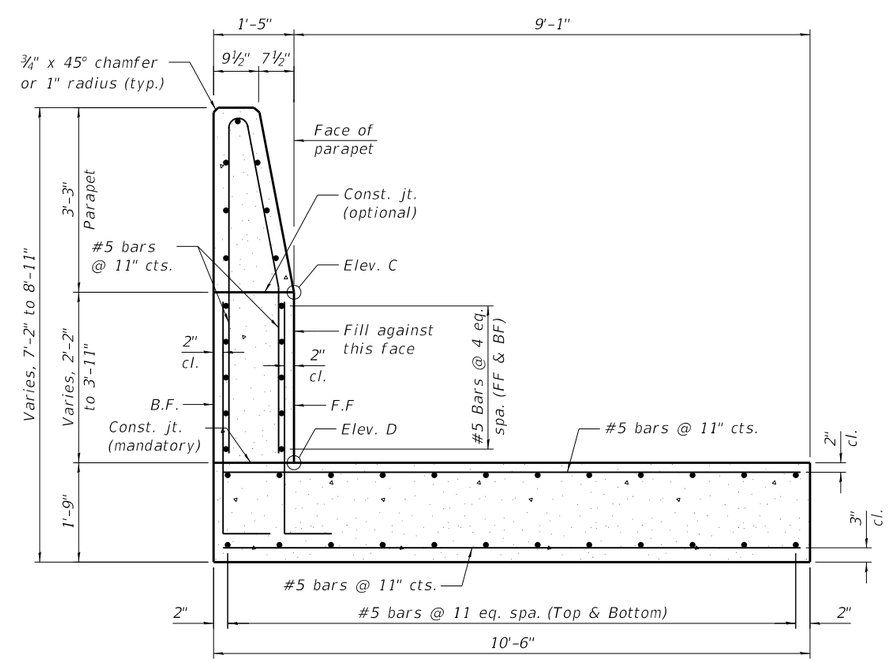

SECTION B-B

Sta. 47+39.59 to Sta. 49+00.00
Showing Concrete Barrier Wall (Special No. 1)

Station	Elev. A	Elev. B	Elev. C	Elev. D
47+39.57	654.16	652.67	653.39	651.26
47+50.00	654.34	651.26	653.56	651.26
47+75.00	654.68	651.36	654.04	651.26
48+00.00	655.02	651.80	654.62	651.26
48+20.00	655.41	651.98	655.15	651.26
48+21.00	N/A	N/A	655.18	652.26
48+50.00	N/A	N/A	656.05	652.26
48+51.00	N/A	N/A	656.09	653.26
48+75.00	N/A	N/A	656.89	653.26
48+76.00	N/A	N/A	656.92	654.26
49+00.00	N/A	N/A	657.80	654.26

NOTES:

1. Dimensions for concrete removal are estimated. The actual area of removal should be determined by engineer at the time of construction.
2. Existing wall plans are not available. Contractor to verify dimensions in the field.
3. Reinforcement bars designated (E) shall be epoxy coated.
4. Protective coat shall be applied to the interior, top and back faces of parapet and the exposed face of concrete wall.
5. The Contractor shall field verify the location of all underground utilities. The Contractor shall take precautions to protect existing underground utilities that are to remain in service during constructionof the wall. Any damage to underground utilities will be responsibility of the Contractor. For locations and elevations of utilities, see Utility Plans.
6. Wall stations are given to the front face of the wall and are measured from the PR baseline.

LEGEND

Concrete Removal

Temporary Soil Retention System (Special)

BILL OF MATERIAL

Item	Unit	Quantity
Protective coat	Sq. Yd.	185
Concrete Removal	Cu. Yd.	23
Temp. Soil Retention System (Special)	Sq. Ft.	171
Concrete Barrier Wall (Special No. 1)	Foot	161

MODEL: Sheet
FILE NAME: pw:\\aecom-na-pw.bentley.com:AECOM_DS16_NA\Documents\60603202-Brush College\900-CAD GIS\910_CAD\03_SHEETS\01_AECOM\Structural\60603202_South-Wall-Details.dgn

AECOM

USER NAME = monica.crinion	DESIGNED - BD	REVISED -	
	CHECKED -	REVISED -	
PLOT SCALE = N.T.S.	DRAWN - BD	REVISED -	
PLOT DATE = 11/3/2020	CHECKED - MCC	REVISED -	

STATE OF ILLINOIS
DEPARTMENT OF TRANSPORTATION

ROADWAY DETAILS

F.A.U. RTE.	SECTION	COUNTY	TOTAL SHEETS	SHEET NO.
7448	09-00933-01-BR	MACON	996	162
		CONTRACT NO. XXXX(XXX)		
		ILLINOIS FED. AID PROJECT		

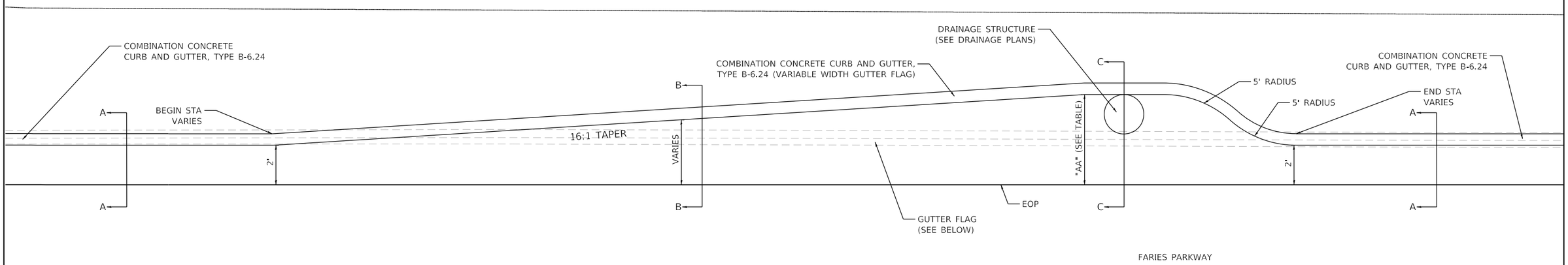

PLAN VIEW

GUTTER FLARE LOCATION	BEGIN STA	END STA	MAX WIDTH "AA"
1	210+13.03	210+81.29	5.55'
2	212+46.89	213+31.82	6.54'
3	214+61.64	215+40.12	6.53'
4	217+38.47	217+90.09	4.56'
5	219+88.79	220+40.25	4.55'
6	222+38.87	222+90.52	4.56'

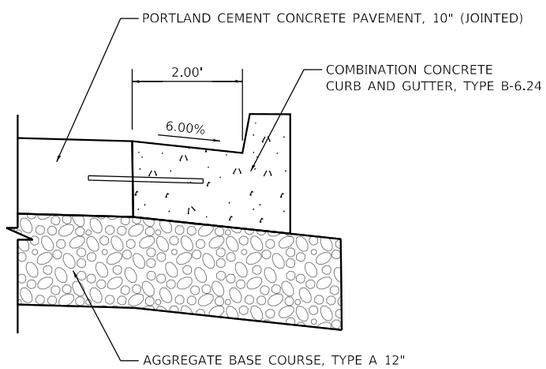

SECTION A-A

COMBINATION CONCRETE CURB AND GUTTER, TYPE B-6.24

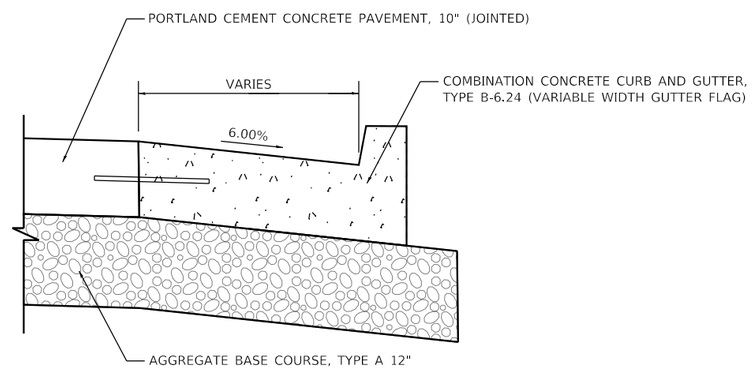

SECTION B-B

COMBINATION CONCRETE CURB AND GUTTER,
TYPE B-6.24 (VARIABLE WIDTH GUTTER FLAG)

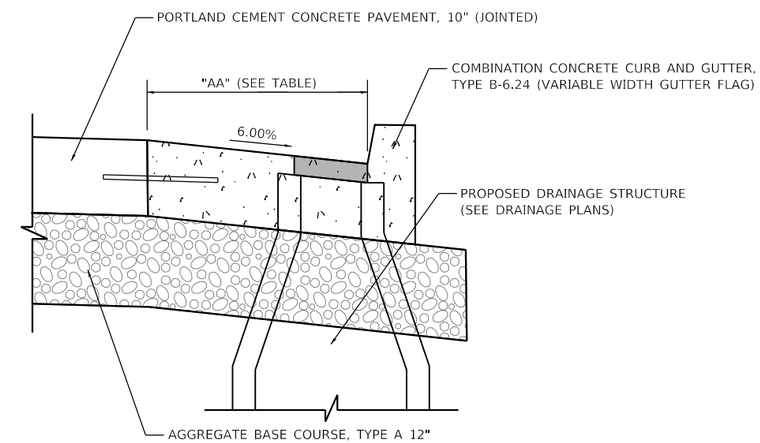

SECTION C-C

COMBINATION CONCRETE CURB AND GUTTER,
TYPE B-6.24 (VARIABLE WIDTH GUTTER FLAG)

MODEL: Default
FILE NAME: pw:\\aecom=na=pw.bentley.com:AECOM_DS16_NA\Documents\60603202-Brush College\900-CAD GIS\910_CAD\03_SHEETS\01_AECOM\Details\60603202_SHT_Roadway_Detail_05.dgn

AECOM
345 EAST ASH AVENUE, SUITE B
DECATUR, IL 62526
PHONE: (217) 775-6065

USER NAME = SearsB	DESIGNED - LMB	REVISED -	
	DRAWN - EU	REVISED -	
PLOT SCALE = 5.0000 ' / in.	CHECKED - WBS	REVISED -	
PLOT DATE = 11/3/2020	DATE - 10/30/2020	REVISED -	

STATE OF ILLINOIS
DEPARTMENT OF TRANSPORTATION

ROADWAY DETAILS

SCALE: | SHEET 5 OF 10 SHEETS | STA. TO STA.

F.A.U. RTE.	SECTION	COUNTY	TOTAL SHEETS	SHEET NO.
7448	09-00933-01-BR	MACON	996	163
		CONTRACT NO. XXXX(XXX)		
		ILLINOIS	FED. AID PROJECT	

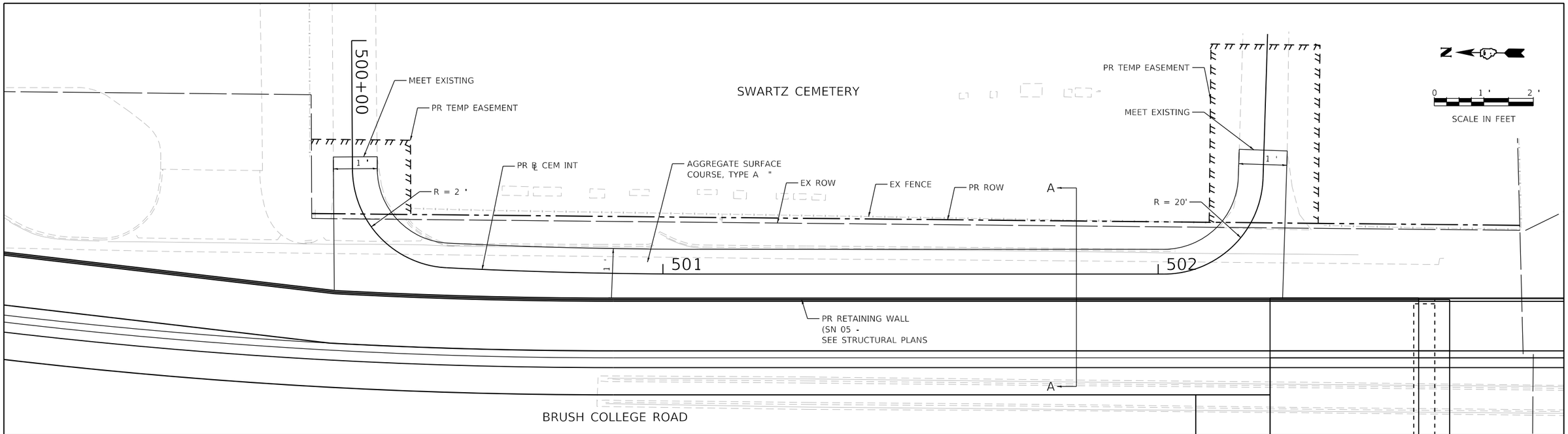

PLAN VIEW

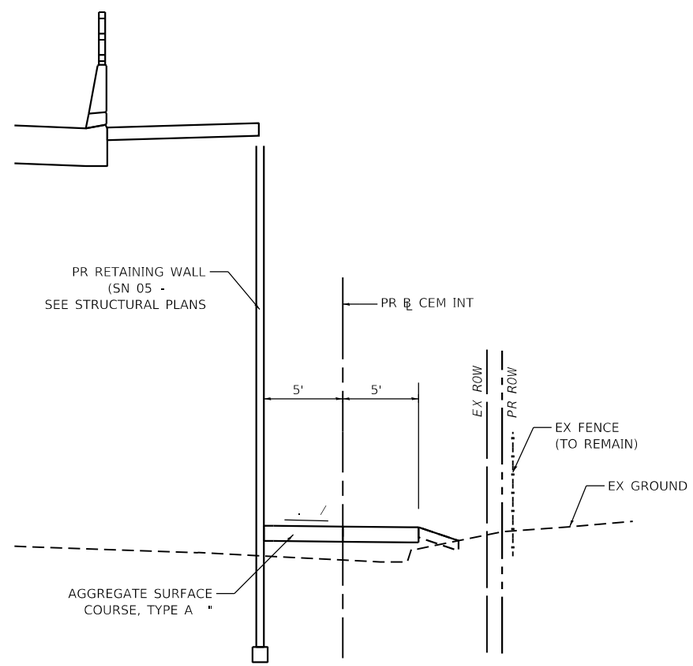

SECTION -

MODE : Default
FILE NAM : p :\aeco . le : _DS16_NA\Documents\60603202 - llege90 - \910_CAD\03_SHEETS\01_AECOM\Details\60603202_SHT_Roadway_Detail_0 .

AECOM
345 EAST ASH AVENUE, SUITE B
DECATUR, IL 62526
PHON . -

USER NAME = SearsB	DESIGNED - LMB	REVISED -	
	DRAWN - LMB	REVISED -	
PLOT SCALE = 2 ' / ı .	CHECKED - WBS	REVISED -	
PLOT DATE = 11/3/2020	DATE - 10/30/2020	REVISED -	

STATE O I
DEPARTMENT OF TRANSPORTA I

ROADWAY DETAILS

SCAL : "=1 ' | SHEET 6 OF 10 SHEETS | ST . XX+X . TO ST . XX+X .

RT .	SECTION	COUNTY	TOTAL SHEETS	SHEET N .
7448	0 -	MACON	996	164
		CONTRACT N .		
		ILLINOIS FE .		

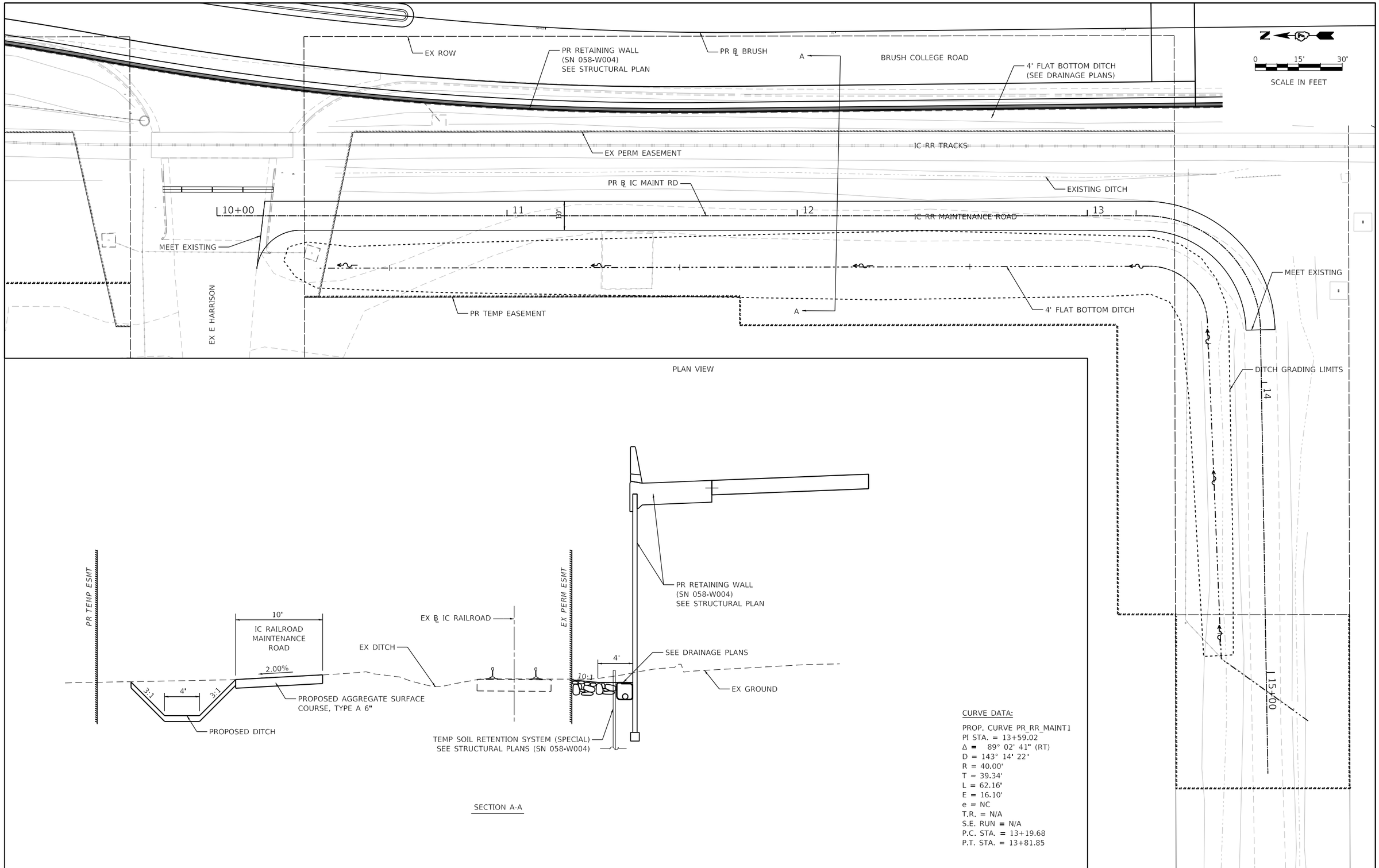

CURVE DATA:

PROP. CURVE PR_RR_MAINT1
PI STA. = 13+59.02
Δ = 89° 02' 41" (RT)
D = 143° 14' 22"
R = 40.00'
T = 39.34'
L = 62.16'
E = 16.10'
e = NC
T.R. = N/A
S.E. RUN = N/A
P.C. STA. = 13+19.68
P.T. STA. = 13+81.85

MODEL: Default
FILE NAME: pw:\\aecom=na=pw.bentley.com:AECOM_DS16_NA\Documents\60603202-Brush College\900-CAD GIS\910_CAD\03_SHEETS\01_AECOM\Details\60603202_SHT_Roadway_Detail_07.dgn

AECOM
345 EAST ASH AVENUE, SUITE B
DECATUR, IL 62526
PHONE: (217) 775-6065

USER NAME = SearsB	DESIGNED - LMB	REVISED -	
	DRAWN - EU	REVISED -	
PLOT SCALE = 30.0000 ' / in.	CHECKED - WBS	REVISED -	
PLOT DATE = 11/3/2020	DATE - 10/30/2020	REVISED -	

STATE OF ILLINOIS
DEPARTMENT OF TRANSPORTATION

ROADWAY DETAILS

SCALE: | SHEET 7 OF 10 SHEETS | STA. TO STA.

F.A.U. RTE.	SECTION	COUNTY	TOTAL SHEETS	SHEET NO.
7448	09-00933-01-BR	MACON	996	165
		CONTRACT NO. XXXX(XXX)		
		ILLINOIS	FED. AID PROJECT	

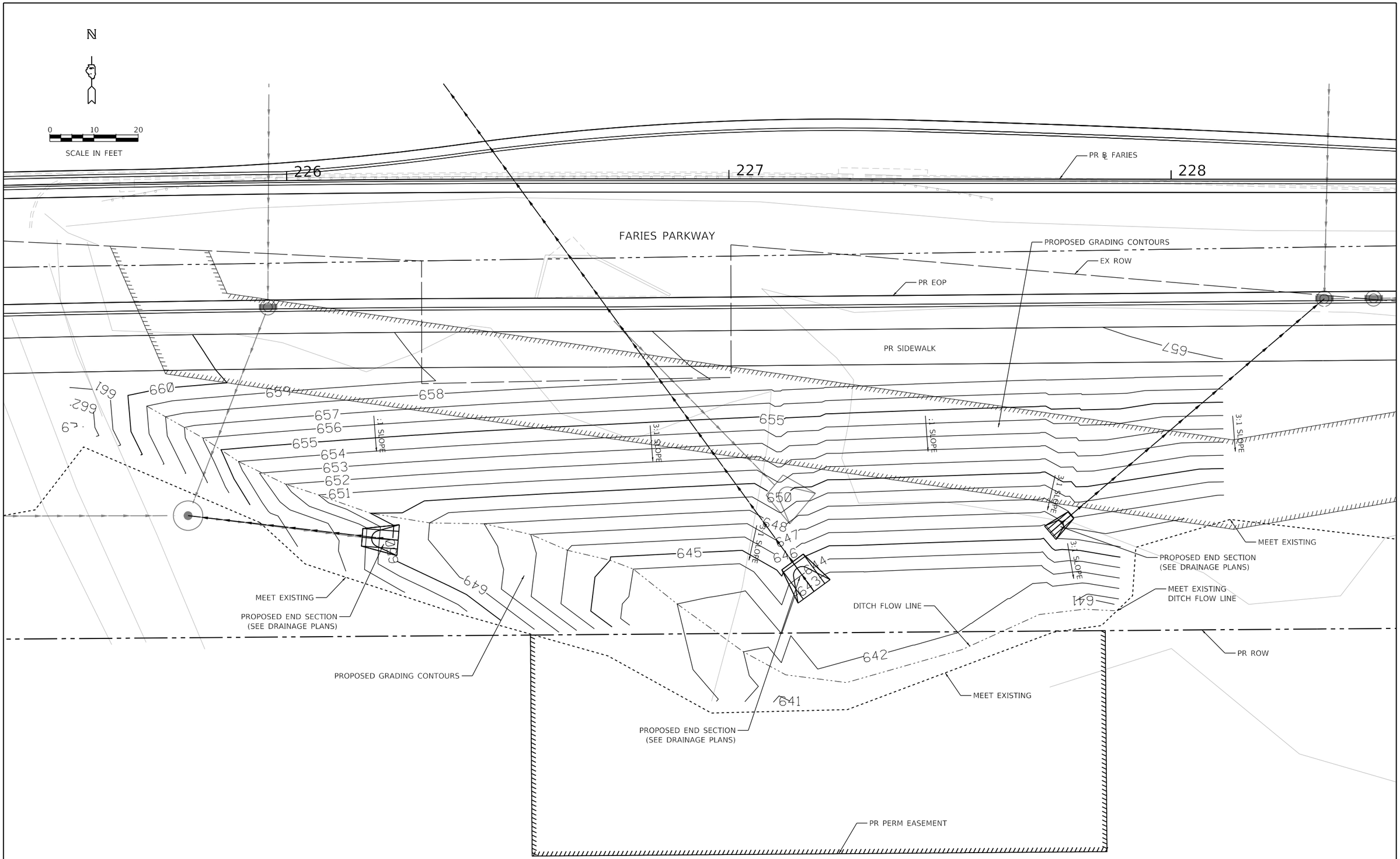

FARIES PARKWAY CULVERT GRADING DETAILS

MODE : Default
FILE NAM : p :\aeco . le : _DS16_NA\Documents\6060320 - llege\90 - \910_CAD\03_SHEETS\01_AECOM\Details\60603202_SHT_Roadway_Detail_0 .

AECOM
345 EAST ASH AVENUE, SUITE B
DECATUR, IL 62526
PHON . -

USER NAME = SearsB	DESIGNED - LMB	REVISED -	
	DRAWN - LMB	REVISED -	
PLOT SCALE = 2 ' / I .	CHECKED - WBS	REVISED -	
PLOT DATE = 11/3/2020	DATE - 10/30/2020	REVISED -	

STATE O I
DEPARTMENT OF TRANSPORTA I

ROADWAY DETAILS

SCAL : "=1 ' | SHEET 8 OF 10 SHEETS | ST . | TO ST .

RT .	SECTION	COUNTY	TOTAL SHEETS	SHEET N .
7448	0 -	MACON	996	166
		CONTRACT N .		
	ILLINOIS	FE .		

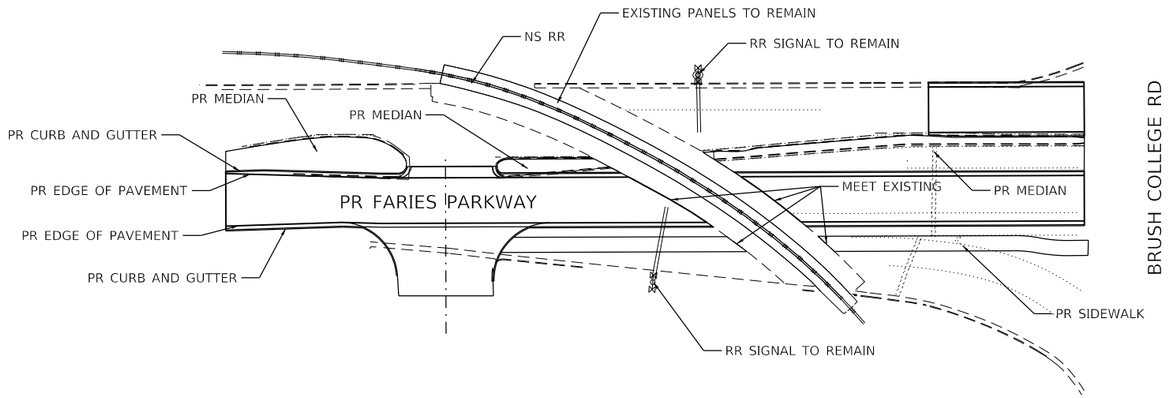

NS RAILROAD AT FARIES PARKWAY CROSSING DETAIL – PLAN VIEW

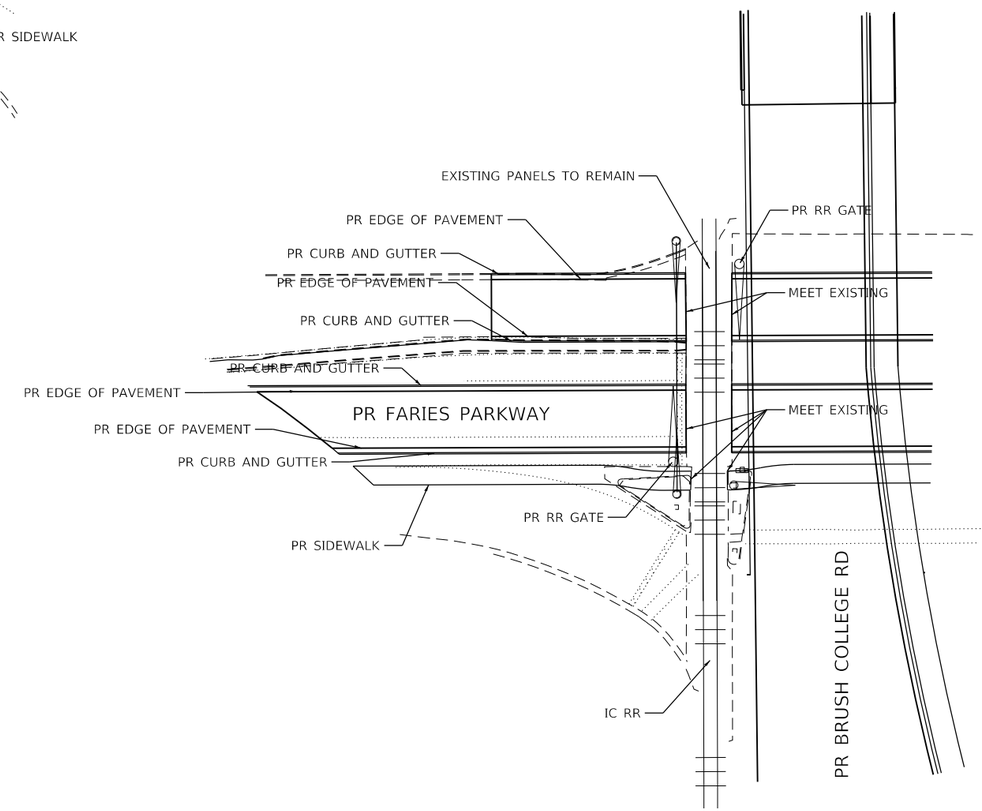

IC RAILROAD AT FARIES PARKWAY CROSSING DETAIL – PLAN VIEW

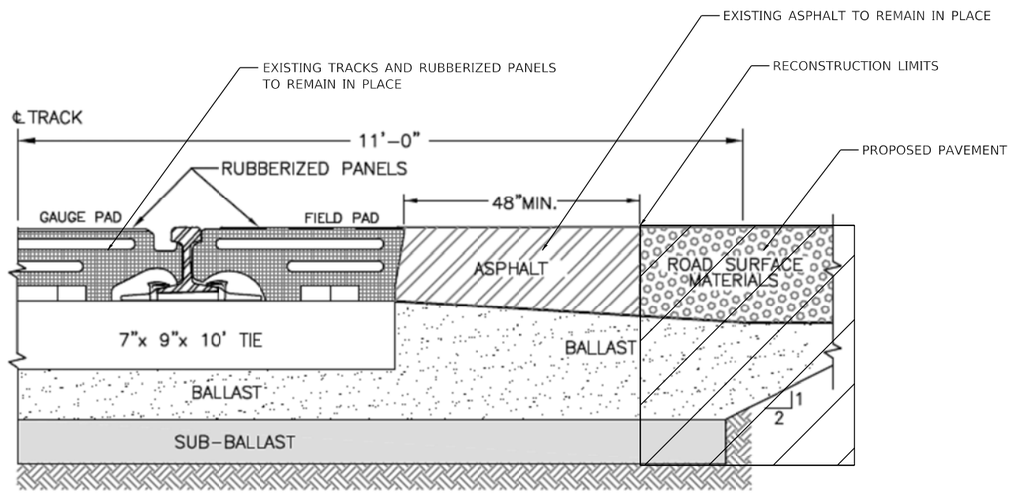

HALF SECTION RUBBERIZED CROSSING

N.T.S.

EXISTING TYPICAL RUBBERIZED CROSSING CROSS SECTION

NODE : Default
FILE NAM : p :\aeco . le : _DS16_NA\Documents\60603320 - llegel90 - \910_CAD\03_SHEETS\01_AECOM\Details\60603202_SHT_Roadway_Detail_0 .

AECOM
345 EAST ASH AVENUE, SUITE B
DECATUR, IL 62526
PHON . -

USER NAME = SearsB	DESIGNED - JGK	REVISED -	
	DRAWN - JGK	REVISED -	
PLOT SCALE = 2 ' / I .	CHECKED - WBS	REVISED -	
PLOT DATE = 11/3/2020	DATE - 10/30/2020	REVISED -	

STATE O I
DEPARTMENT OF TRANSPORTA I

ROADWAY DETAILS

SCAL : "=5 ' | SHEET 9 OF 10 SHEETS | ST . TO ST .

RT .	SECTION	COUNTY	TOTAL SHEETS	SHEET N .
7448	0 -	MACON	996	167
		CONTRACT N .		
		ILLINOIS FE .		

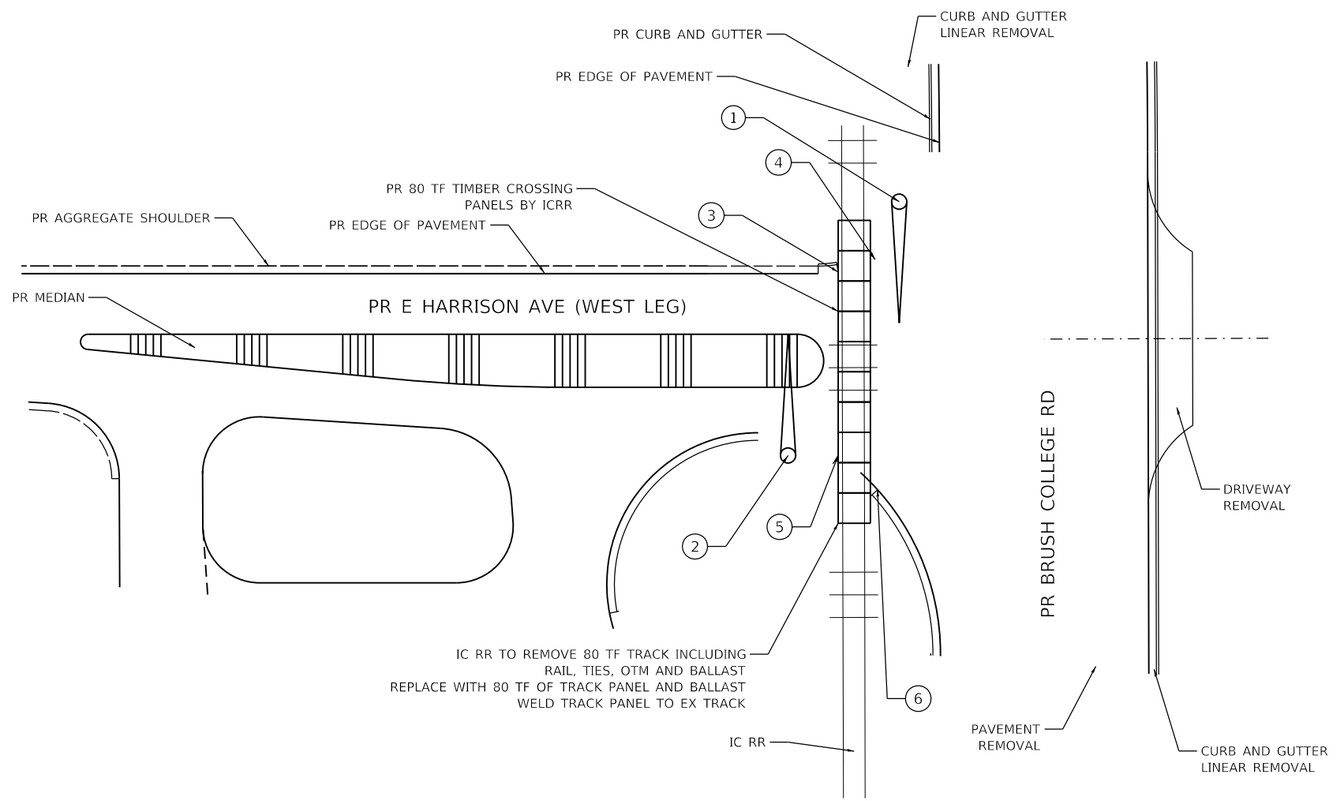

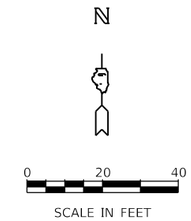

PROPOSED E HARRISON AVE
GRADE CROSSING PLAN VIEW

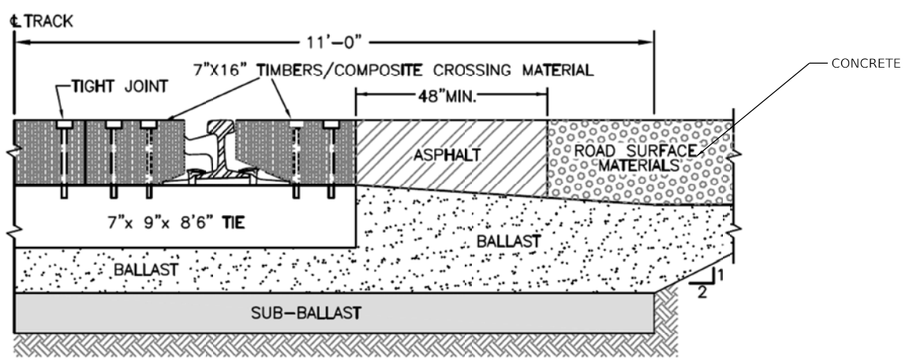

HALF SECTION SOLID TIMBER OR COMPOSITE CROSSING
N.T.S.

PROPOSED TIMBER E HARRISON AVE
CROSSING PROFILE

LEGEN :

1. PROPOSED GRADE CROSSING WARNING EQUIPMENT BY IC RR, STA 810+2 '
2. PROPOSED GRADE CROSSING WARNING EQUIPMENT BY IC RR, STA 809+9 '
3. STA 810+0 '
4. STA 810+1 '
5. STA 810+0 '
6. STA 810+2 '

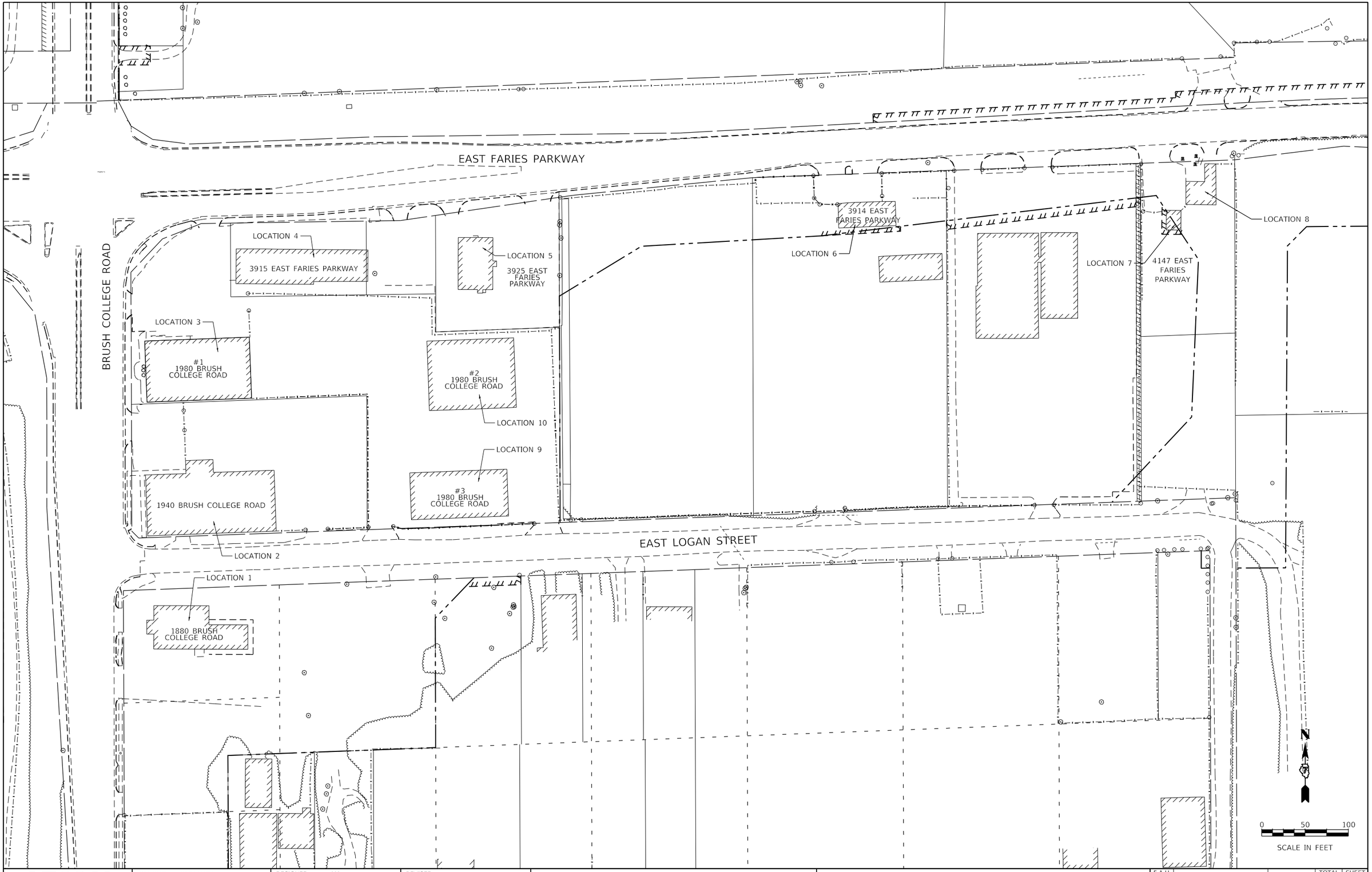

MODEL: Default
FILE NAME: pw:\\aecom-na-pw.bentley.com:AECOM_DS16_NA\Documents\60603202-Brush College\900-CAD GIS\910_CAD\03_SHEETS\01_AECOM\Roadway\60603202_SHT_Building_Demo_Location_Map.dgn

AECOM
315 EAST ASH AVENUE, SUITE B
DECATUR, IL 62526
PHONE: (217) 775-6065

USER NAME = meron.asnake	DESIGNED - MA	REVISED -
	DRAWN - MA	REVISED -
PLOT SCALE = 100.0000 ' / in.	CHECKED - KM	REVISED -
PLOT DATE = 10/30/2020	DATE - 10/30/2020	REVISED -

STATE OF ILLINOIS
DEPARTMENT OF TRANSPORTATION

BUILDING DEMOLITION KEY PLAN
BRUSH COLLEGE ROAD

SCALE: 1=50' | SHEET 1 OF 1 SHEETS | STA. TO STA.

F.A.U. RTE.	SECTION	COUNTY	TOTAL SHEETS	SHEET NO.
7448	09-00933-01-BR	MACON	996	169
		CONTRACT NO. XXXX(XXX)		
		ILLINOIS	FED. AID PROJECT	

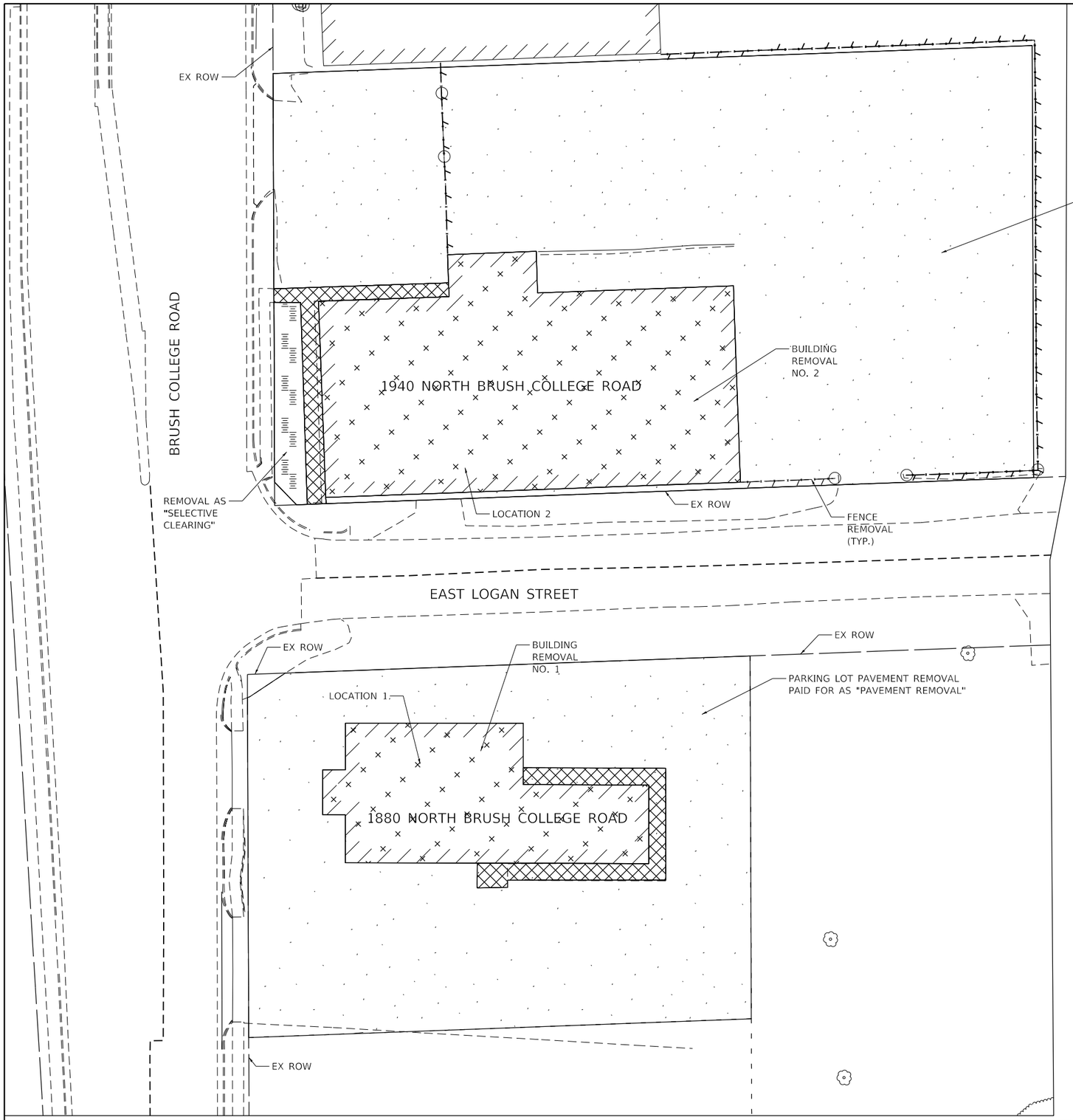

N

0 20 40

SCALE IN FEET

LEGEND:

- PARKING LOT PAVEMENT REMOVAL PAID FOR AS "PAVEMENT REMOVAL"
- SIDEWALK REMOVAL
- BUILDING REMOVAL
- REMOVAL AS "SELECTIVE CLEARING"
- FENCE REMOVAL
- TREE REMOVAL / STUMP REMOVAL
- BUSHES TO BE REMOVED, PAID FOR AS "DEBRIS REMOVAL"
- BOLLARD REMOVAL, PAID FOR AS "DEBRIS REMOVAL"

NOTES:

1. THE REMOVAL AND DISPOSAL OF ALL DEBRIS AND / OR OBJECTS, INCLUDING BENCHES, SHEDS, ARCHES AND ANY OTHER STRUCTURES AND ITS FOUNDATIONS THAT ARE NOT PART OF THE BUILDING REMOVAL WITHIN THE CONSTRUCTION LIMITS SHALL BE INCLUDED IN THE UNIT PRICE FOR DEBRIS REMOVAL.

2. CONTRACTOR SHALL TAKE EXTRA CARE WHEN REMOVING BUILDING AND DEBRIS SO THAT EXISTING TREES AND SHRUBS ARE NOT DAMAGED.

MODEL: Default
FILE NAME: pw:\\aecom=na=pw.bentley.com:AECOM_DS16_NA\Documents\60603202-Brush College\900-CAD GIS\910_CAD\03_SHEETS\01_AECOM\Roadway\60603202_SHT_Building_Demo_01.dgn

AECOM
345 EAST ASH AVENUE, SUITE B
DECATUR, IL 62526
PHONE: (217) 775-6065

USER NAME = meron.asnake	DESIGNED - MA	REVISED -	
	DRAWN - MA	REVISED -	
PLOT SCALE = 40.0000 ' / in.	CHECKED - KM	REVISED -	
PLOT DATE = 10/30/2020	DATE - 10/30/2020	REVISED -	

STATE OF ILLINOIS
DEPARTMENT OF TRANSPORTATION

BUILDING DEMOLITION PLAN
BRUSH COLLEGE ROAD

SCALE: 1"=20' | SHEET 1 OF 4 SHEETS | STA. TO STA.

F.A.U. RTE.	SECTION	COUNTY	TOTAL SHEETS	SHEET NO.
7448	09-00933-01-BR	MACON	996	170
		CONTRACT NO. XXXX(XXX)		
		ILLINOIS	FED. AID PROJECT	

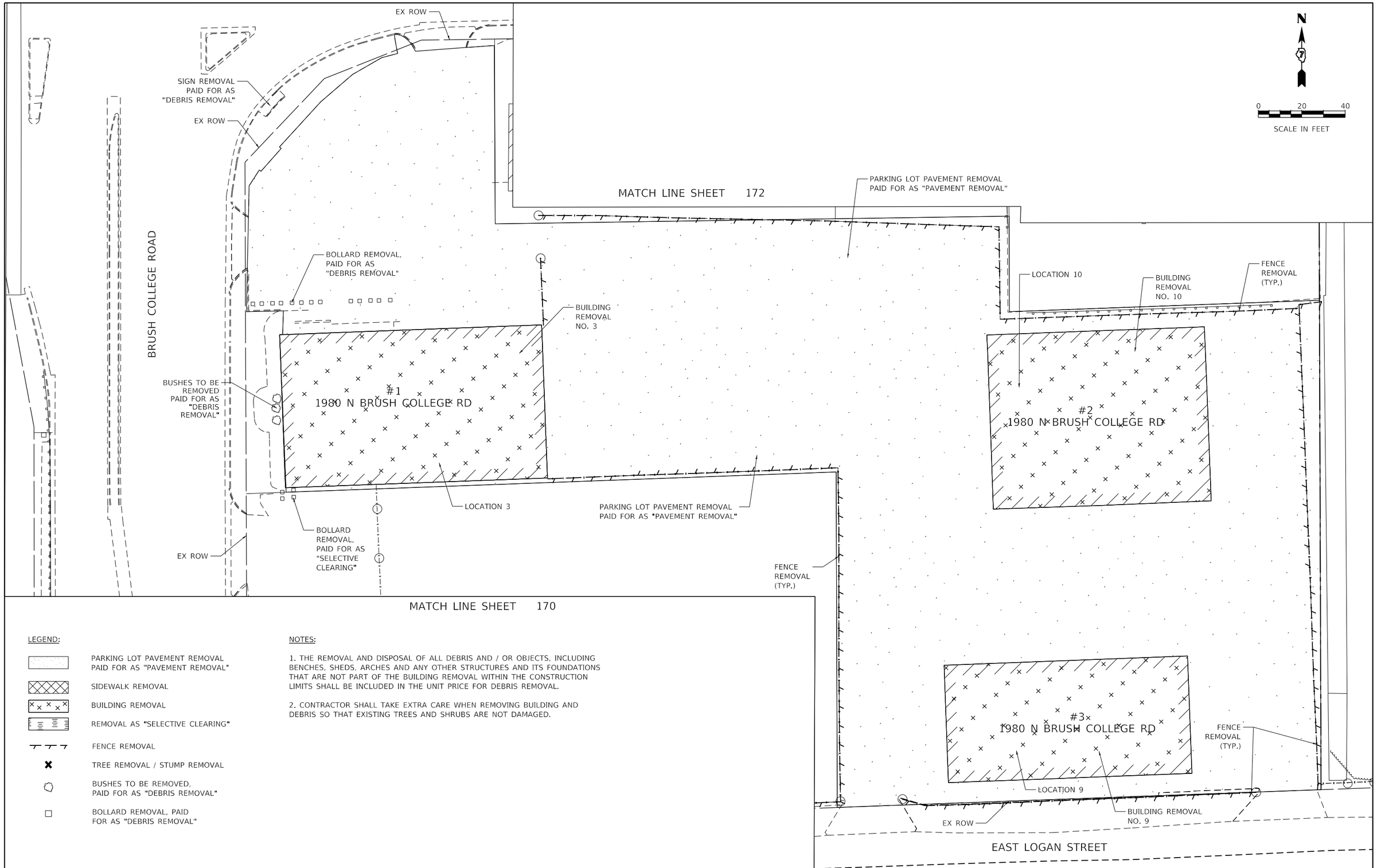

LEGEND:

- PARKING LOT PAVEMENT REMOVAL PAID FOR AS "PAVEMENT REMOVAL"
- SIDEWALK REMOVAL
- BUILDING REMOVAL
- REMOVAL AS "SELECTIVE CLEARING"
- FENCE REMOVAL
- TREE REMOVAL / STUMP REMOVAL
- BUSHES TO BE REMOVED, PAID FOR AS "DEBRIS REMOVAL"
- BOLLARD REMOVAL, PAID FOR AS "DEBRIS REMOVAL"

NOTES:

1. THE REMOVAL AND DISPOSAL OF ALL DEBRIS AND / OR OBJECTS, INCLUDING BENCHES, SHEDS, ARCHES AND ANY OTHER STRUCTURES AND ITS FOUNDATIONS THAT ARE NOT PART OF THE BUILDING REMOVAL WITHIN THE CONSTRUCTION LIMITS SHALL BE INCLUDED IN THE UNIT PRICE FOR DEBRIS REMOVAL.

2. CONTRACTOR SHALL TAKE EXTRA CARE WHEN REMOVING BUILDING AND DEBRIS SO THAT EXISTING TREES AND SHRUBS ARE NOT DAMAGED.

AECOM
345 EAST ASH AVENUE, SUITE B
DECATUR, IL 62526
PHONE: (217) 775-6065

USER NAME = meron.asnake	DESIGNED - MA	REVISED -	
	DRAWN - MA	REVISED -	
PLOT SCALE = 40.0000 ' / in.	CHECKED - KW	REVISED -	
PLOT DATE = 10/30/2020	DATE - 10/30/2020	REVISED -	

STATE OF ILLINOIS
DEPARTMENT OF TRANSPORTATION

BUILDING DEMOLITION PLAN
BRUSH COLLEGE ROAD

SCALE: 1"=20' | SHEET 2 OF 4 SHEETS | STA. TO STA.

F.A.U. RTE.	SECTION	COUNTY	TOTAL SHEETS	SHEET NO.
7448	09-00933-01-BR	MACON	996	171

CONTRACT NO. XXXX(XXX)

ILLINOIS | FED. AID PROJECT

MODEL: Default
FILE NAME: pw:\\aecom-na-pw.bentley.com:AECOM_DS16_NA\Documents\60603202-Brush College\900-CAD GIS\910_CAD\03_SHEETS\01_AECOM\Roadway\60603202_SHT_Building_Demo_02.dgn

EX ROW

EAST FARIES PARKWAY

EX ROW

PARKING LOT PAVEMENT REMOVAL
PAID FOR AS "PAVEMENT REMOVAL"

PARCEL LINE

BUILDING REMOVAL NO. 4

BUILDING REMOVAL NO. 5

TREE REMOVAL

12"

18"

18"

24"

12"

#3915 EAST FARIES PARKWAY

#3925 EAST FARIES PARKWAY

LOCATION 5

LOCATION 4

FENCE REMOVAL (TYP.)

REMOVAL AS "SELECTIVE CLEARING"

TREE REMOVAL

MATCH LINE SHEET 171

MATCH LINE SHEET 173

N

0 20 40

SCALE IN FEET

PARKING LOT PAVEMENT REMOVAL
PAID FOR AS "PAVEMENT REMOVAL"

BOLLDARD REMOVAL
PAID FOR AS
"DEBRIS REMOVAL"

GUARDRAIL REMOVAL

FENCE REMOVAL (TYP.)

LEGEND:

- PARKING LOT PAVEMENT REMOVAL PAID FOR AS "PAVEMENT REMOVAL"
- SIDEWALK REMOVAL
- BUILDING REMOVAL
- REMOVAL AS "SELECTIVE CLEARING"
- FENCE REMOVAL
- TREE REMOVAL / STUMP REMOVAL
- BUSHES TO BE REMOVED, PAID FOR AS "DEBRIS REMOVAL"
- BOLLARD REMOVAL, PAID FOR AS "DEBRIS REMOVAL"

NOTES:

1. THE REMOVAL AND DISPOSAL OF ALL DEBRIS AND / OR OBJECTS, INCLUDING BENCHES, SHEDS, ARCHES AND ANY OTHER STRUCTURES AND ITS FOUNDATIONS THAT ARE NOT PART OF THE BUILDING REMOVAL WITHIN THE CONSTRUCTION LIMITS SHALL BE INCLUDED IN THE UNIT PRICE FOR DEBRIS REMOVAL.

2. CONTRACTOR SHALL TAKE EXTRA CARE WHEN REMOVING BUILDING AND DEBRIS SO THAT EXISTING TREES AND SHRUBS ARE NOT DAMAGED.

AECOM
345 EAST ASH AVENUE, SUITE B
DECATUR, IL 62526
PHONE: (217) 775-6065

USER NAME = meron.asnake	DESIGNED - MA	REVISED -	
	DRAWN - MA	REVISED -	
PLOT SCALE = 40.0000 ' / in.	CHECKED - KM	REVISED -	
PLOT DATE = 10/30/2020	DATE - 10/30/2020	REVISED -	

STATE OF ILLINOIS
DEPARTMENT OF TRANSPORTATION

BUILDING DEMOLITION PLAN
BRUSH COLLEGE ROAD

SCALE: 1"=20' | SHEET 3 OF 4 SHEETS | STA. TO STA.

F.A.U. RTE.	SECTION	COUNTY	TOTAL SHEETS	SHEET NO.
7448	09-00933-01-BR	MACON	996	172

CONTRACT NO. XXXX(XXX)

ILLINOIS FED. AID PROJECT

MODEL: Default
FILE NAME: pw:\\aecom-na-pw.bentley.com:AECOM_DS16_NA\Documents\60603202-Brush College\900-CAD GIS\910_CAD\03_SHEETS\01_AECOM\Roadway\60603202_SHT_Building_Demo_03.dgn

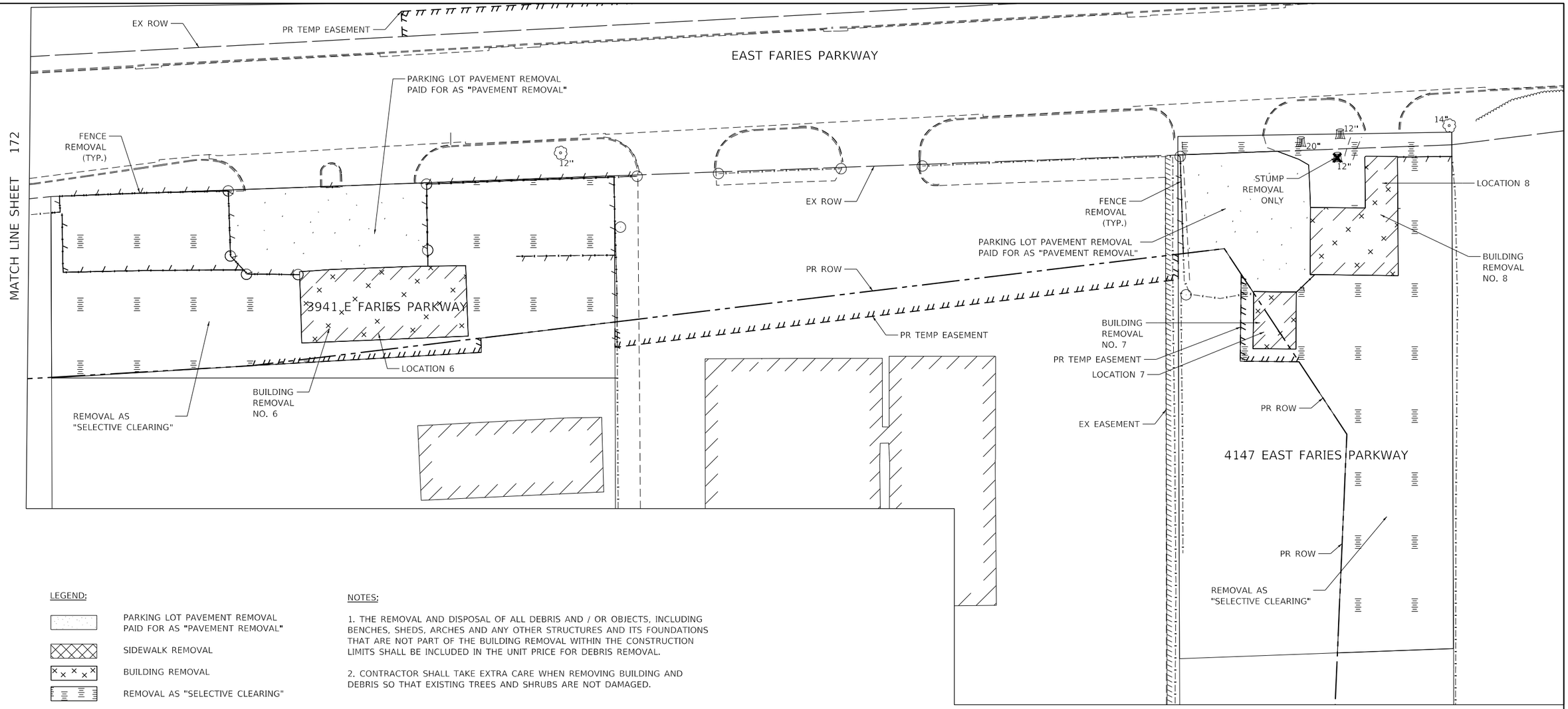

LEGEND:

- PARKING LOT PAVEMENT REMOVAL PAID FOR AS "PAVEMENT REMOVAL"
- SIDEWALK REMOVAL
- BUILDING REMOVAL
- REMOVAL AS "SELECTIVE CLEARING"
- FENCE REMOVAL
- TREE REMOVAL / STUMP REMOVAL
- BUSHES TO BE REMOVED, PAID FOR AS "DEBRIS REMOVAL"
- BOLLARD REMOVAL, PAID FOR AS "DEBRIS REMOVAL"

NOTES:

1. THE REMOVAL AND DISPOSAL OF ALL DEBRIS AND / OR OBJECTS, INCLUDING BENCHES, SHEDS, ARCHES AND ANY OTHER STRUCTURES AND ITS FOUNDATIONS THAT ARE NOT PART OF THE BUILDING REMOVAL WITHIN THE CONSTRUCTION LIMITS SHALL BE INCLUDED IN THE UNIT PRICE FOR DEBRIS REMOVAL.

2. CONTRACTOR SHALL TAKE EXTRA CARE WHEN REMOVING BUILDING AND DEBRIS SO THAT EXISTING TREES AND SHRUBS ARE NOT DAMAGED.

N

0 20 40

SCALE IN FEET

MODEL: Default
FILE NAME: pw:\\aecom-na-pw.bentley.com:AECOM_DS16_NA\Documents\60603202-Brush College\900-CAD GIS\910_CAD\03_SHEETS\01_AECOM\Roadway\60603202_SHT_Building_Demo_04.dgn

AECOM
345 EAST ASH AVENUE, SUITE B
DECATUR, IL 62526
PHONE: (217) 775-6065

USER NAME = meron.asnake	DESIGNED - MA	REVISED -	
	DRAWN - MA	REVISED -	
PLOT SCALE = 40.0000 ' / in.	CHECKED - KM	REVISED -	
PLOT DATE = 10/30/2020	DATE - 10/30/2020	REVISED -	

STATE OF ILLINOIS
DEPARTMENT OF TRANSPORTATION

BUILDING DEMOLITION PLAN
BRUSH COLLEGE ROAD

SCALE: 1"=20' | SHEET 4 OF 4 SHEETS | STA. TO STA.

F.A.U. RTE.	SECTION	COUNTY	TOTAL SHEETS	SHEET NO.
7448	09-00933-01-BR	MACON	996	173

CONTRACT NO. XXXX(XXX)

ILLINOIS | FED. AID PROJECT

TEMPORARY TRAFFIC CONTROL SCHEDULE

SHEET	TEMPORARY PAVEMENT MARKING LETTERS AND SYMBOLS	TEMPORARY PAVEMENT MARKING - LINE 4"	TEMPORARY PAVEMENT MARKING - LINE 6"	TEMPORARY PAVEMENT MARKING - LINE 12"	TEMPORARY PAVEMENT MARKING - LINE 24"	TEMPORARY CONCRETE BARRIER	RELOCATE TEMPORARY CONCRETE BARRIER	IMPACT ATTENUATORS, TEMPORARY (FULLY REDIRECTIVE, NARROW), TEST LEVEL 3	IMPACT ATTENUATORS, RELOCATE (FULLY REDIRECTIVE, NARROW), TEST LEVEL 3	BARRIER WALL REFLECTORS, TYPE C	TEMPORARY INFORMATION SIGNING	TEMPORARY PAVEMENT
	SQ FT	FOOT	FOOT	FOOT	FOOT	FOOT	FOOT	EACH	EACH	EACH	SQ FT	SQ YD
PRE-STAGE A - 1	0	417	170	0	0	0	0	0	0	0	12	210
PRE-STAGE A - 2	24	2537	1432	0	0	0	0	0	0	0	24	920
PRE-STAGE A - 3	0	556	377	0	0	0	0	0	0	0	12	77
PRE-STAGE B - 1	0	947	85	117	0	0	0	0	0	0	12	0
PRE-STAGE B - 2	44	6373	1162	467	24	300	0	0	0	12	24	46
PRE-STAGE B - 3	0	2074	341	146	0	0	0	0	0	0	0	0
PRE-STAGE C - 1	0	268	200	0	0	0	0	0	0	0	0	0
PRE-STAGE C - 2	28	2994	1138	2	72	50	300	2	0	14	0	61
PRE-STAGE C - 3	0	2081	533	120	0	25	0	0	0	1	0	0
STAGE 1 - 1	0	0	0	0	0	0	0	0	0	0	0	0
STAGE 1 - 2	0	2037	1097	91	0	0	363	0	0	15	0	0
STAGE 1 - 3	0	633	0	0	0	50	13	0	1	3	0	0
STAGE 1 - 4	0	714	179	315	0	0	0	0	0	0	0	0
STAGE 1 - 5	56	5099	2239	704	0	0	0	0	0	0	0	0
STAGE 1 - 6	0	1305	138	0	0	225	0	0	1	9	0	0
STAGE 1 - 7	0	266	0	0	0	0	0	0	0	0	0	0
STAGE 2 - 1	0	2364	0	0	0	0	0	0	0	0	0	0
STAGE 2 - 2	0	3006	605	262	0	0	0	0	0	0	0	41
STAGE 2 - 3	0	1404	351	229	0	0	0	0	0	0	0	0
STAGE 2 - 4	0	558	115	160	0	0	0	0	0	0	0	0
STAGE 2 - 5	0	4487	650	540	0	0	213	0	1	9	0	0
STAGE 2 - 6	16	1398	134	102	24	0	0	0	0	0	0	112
STAGE 2 - 7	0	125	0	0	0	0	0	0	0	0	0	0
STAGE 3A - 1	0	2705	0	0	0	0	300	0	0	12	0	0
STAGE 3A - 2	0	808	0	0	0	0	0	0	0	0	0	0
STAGE 3A - 3	0	2573	0	232	0	0	0	0	0	0	0	0
STAGE 3A - 4	0	1033	0	0	0	0	50	0	1	2	0	0
STAGE 3A - 5	40	8248	1064	148	40	818	300	2	1	45	0	1360
STAGE 3A - 6	0	4216	0	0	0	1170	0	2	0	47	0	292
STAGE 3A - 7	4	2414	77	228	0	0	0	0	0	0	0	0
STAGE 3A - 8	0	0	0	0	0	0	0	0	0	0	0	0
STAGE 3B - 1	0	0	0	0	0	0	0	0	1	0	0	0
STAGE 3B - 2	0	0	0	0	0	0	188	0	0	8	0	0
STAGE 3B - 3	0	0	0	0	0	13	50	0	0	3	0	0
STAGE 3B - 4	0	0	0	0	0	175	0	0	1	7	0	0

	TEMPORARY PAVEMENT MARKING LETTERS AND SYMBOLS	TEMPORARY PAVEMENT MARKING - LINE 4"	TEMPORARY PAVEMENT MARKING - LINE 6"	TEMPORARY PAVEMENT MARKING - LINE 12"	TEMPORARY PAVEMENT MARKING - LINE 24"	TEMPORARY CONCRETE BARRIER	RELOCATE TEMPORARY CONCRETE BARRIER	IMPACT ATTENUATORS, TEMPORARY (FULLY REDIRECTIVE, NARROW), TEST LEVEL 3	IMPACT ATTENUATORS, RELOCATE (FULLY REDIRECTIVE, NARROW), TEST LEVEL 3	BARRIER WALL REFLECTORS, TYPE C	TEMPORARY INFORMATION SIGNING	TEMPORARY PAVEMENT
STAGE 4A - 1	0	0	0	0	0	0	0	0	0	0	0	0
STAGE 4A - 2	0	2369	0	0	0	300	38	0	1	14	0	0
STAGE 4A - 3	0	2386	88	599	0	0	0	0	0	0	0	0
STAGE 4A - 4	0	715	0	0	0	0	0	0	0	0	0	0
STAGE 4A - 5	16	7796	191	176	16	0	1013	0	0	41	0	960
STAGE 4A - 6	16	5865	77	63	82	0	1400	0	0	56	0	292
STAGE 4A - 7	0	3028	0	149	0	0	238	0	1	10	0	0
STAGE 4A - 8	0	2575	0	0	0	0	0	0	0	0	0	0
STAGE 4B - 1	0	1440	0	0	0	0	1013	0	0	41	0	0
STAGE 4B - 2	0	0	0	0	0	0	500	0	0	20	0	0
STAGE 4C - 1	0	1691	0	0	0	0	0	0	0	0	0	0
STAGE 4C - 2	0	3041	0	0	0	0	2263	0	1	91	0	0
STAGE 4C - 3	0	1836	0	135	0	0	388	0	1	16	0	0
STAGE 5 - 1	0	0	0	0	0	0	0	0	0	0	0	0
STAGE 5 - 2	0	0	0	0	0	0	0	0	0	0	0	0
STAGE 5 - 3	0	0	0	0	0	0	0	0	0	0	0	0
STAGE 5 - 4	0	0	0	0	0	0	0	0	0	0	0	0
STAGE 5 - 5	8	1118	402	0	12	0	0	0	0	0	0	0
STAGE 5 - 6	0	0	0	0	0	0	0	0	0	0	0	0
STAGE 5 - 7	0	0	0	0	0	0	0	0	0	0	0	0
STAGE 5 - 8	0	0	0	0	0	0	0	0	0	0	0	0
TOTAL	252	97502	12847	4986	270	3125	8625	6	11	470	84	4371

AECOM
345 EAST ASH AVENUE, SUITE B
DECATUR, IL 62526
PHONE: (217) 775-6065

USER NAME = busanskyl	DESIGNED - MA	REVISED -
	DRAWN - MA	REVISED -
PLOT SCALE = 20.0000 ' / in.	CHECKED - WBS	REVISED -
PLOT DATE = 11/5/2020	DATE - 10/30/2020	REVISED -

STATE OF ILLINOIS
DEPARTMENT OF TRANSPORTATION

SUGGESTED STAGES OF CONSTRUCTION AND TRAFFIC CONTROL SCHEDULE

SCALE: 1"=10' | SHEET 1 OF 1 SHEETS | STA. TO STA.

F.A.U. RTE.	SECTION	COUNTY	TOTAL SHEETS	SHEET NO.
7448	09-00933-01-BR	MACON	996	174

CONTRACT NO. XXXX(XXX)

ILLINOIS FED. AID PROJECT

MODEL: Default
FILE NAME: pw:\\aecom-na-pw.bentley.com:AECOM_DS16_NA\Documents\60603202-Brush College\900-CAD GIS\910_CAD\03_SHEETS\01_AECOM\Construction Staging\60603202_SHT_Staging Schedule.dgn

STAGING NARRATIVE

THE SUGGESTED STAGING OF CONSTRUCTION PROVIDES THE CONTRACTOR THE FLEXIBILITY TO ADJUST THE SEQUENCING OF CONSTRUCTION ALLOWING CERTAIN TASKS INCLUDING BUT NOT LIMITED TO REMOVALS, BUILDING DEMOLITION, WATER MAIN AND UTILITY RELOCATIONS, ROADWAY ITEMS, AND RETAINING WALL AND BRIDGE CONSTRUCTION TO BE ADJUSTED BETWEEN STAGES AND SUB-STAGES. THE CONTRACTOR SHALL SUBMIT A CRITICAL PATH METHOD PROGRESS SCHEDULE IN ACCORDANCE WITH THE SPECIAL PROVISIONS. THE CRITICAL PATH METHOD SHALL SHOW STAGE 1 WORK DESCRIBED BELOW IN THE SHORTEST TIME POSSIBLE AND THE SOUTH LEG OF BRUSH COLLEGE ROAD OPENED TO TRAFFIC IN THE SHORTEST TIME FRAME POSSIBLE.

PRE-STAGE

MAINTENANCE OF TRAFFIC WITHIN PROJECT LIMITS
- SHORT TERM LANE NARROWING, SHIFTS, AND CLOSURES AS REQUIRED TO COMPLETE WORK. MAINTENANCE OF TRAFFIC SHALL FOLLOW APPROPRIATE STANDARDS AND BE APPROVED BY ENGINEER PRIOR TO CONSTRUCTION OPERATIONS
- SEE PRE-STAGE A, B, & C NARRATIVE FOR ADDITIONAL DETAILS

CONSTRUCTION TO BE COMPLETED IN PRE-STAGE
- ALL PRIVATE UTILITY RELOCATIONS NOT COMPLETED PRIOR TO CONSTRUCTION, INCLUDING AMEREN SUBSTATION (COMPLETED BY OTHERS)
- CULVERT LINING BY CITY OF DECATUR (COMPLETED BY OTHERS)
- WATER MAIN CONSTRUCTION
- CITY ELECTRIC, SANITARY, AND STORM SEWER RELOCATIONS
- EXISTING BUILDING DEMOLITION

PRE-STAGE A

MAINTENANCE OF TRAFFIC AT BRUSH COLLEGE ROAD AND FARIES PARKWAY INTERSECTION
- NARROW ALL LANES APPROACHING INTERSECTION TO 10'
- SHIFT LANES TO PROVIDE WORK ZONE ALONG RAISED MEDIAN AREAS

CONSTRUCTION TO BE COMPLETED IN PRE-STAGE A
- REMOVAL OF RAISED MEDIANS.
- CONSTRUCTION OF TEMPORARY PAVEMENT
- INSTALL TEMPORARY TRAFFIC SIGNALS

PRE-STAGE B

MAINTENANCE OF TRAFFIC AT BRUSH COLLEGE ROAD AND FARIES PARKWAY INTERSECTION
- NARROW ALL LANES APPROACHING INTERSECTION
- REDUCE WB FARIES THROUGH LANES FROM 2 TO 1 THROUGH INTERSECTION
- REDUCE WB FARIES LEFT TURN LANES FROM 2 TO 1 AT INTERSECTION
- REDUCE EB FARIES LEFT TURN LANES FROM 2 TO 1 AT INTERSECTION
- REDUCE NB AND SB BRUSH COLLEGE ROAD THROUGH LANES FROM 2 TO 1
- SHIFT LANES TO PROVIDE WORK ZONE FOR WATER MAIN JACKING PITS

CONSTRUCTION TO BE COMPLETED IN PRE-STAGE B
- WATER MAIN INSTALLATION USING JACKING PITS ACROSS THE IC RAILROAD ALONG FARIES PARKWAY

PRE-STAGE C

MAINTENANCE OF TRAFFIC AT BRUSH COLLEGE ROAD AND FARIES PARKWAY INTERSECTION
- NARROW ALL LANES APPROACHING INTERSECTION
- REDUCE WB FARIES THROUGH LANES FROM 2 TO 1 THROUGH INTERSECTION
- REDUCE WB FARIES LEFT TURN LANES FROM 2 TO 1 AT INTERSECTION
- REDUCE EB FARIES LEFT TURN LANES FROM 2 TO 1 AT INTERSECTION
- REDUCE NB BRUSH COLLEGE ROAD THROUGH LANES FROM 2 TO 1
- SHIFT LANES TO PROVIDE WORK ZONE FOR WATER MAIN JACKING PITS

CONSTRUCTION TO BE COMPLETED IN PRE-STAGE C
- WATER MAIN INSTALLATION USING JACKING PITS ACROSS THE NS RAILROAD ALONG BRUSH COLLEGE ROAD

STAGE 1

MAINTENANCE OF TRAFFIC ON BRUSH COLLEGE ROAD
- OFF-ROAD CONSTRUCTION ALONG IC RAILROAD TRACKS
- TEMPORARY ACCESS TO BE UTILIZED FOR SHORT TERM DURATIONS ALONG E HARRISON IC RR GRADE CROSSING
- BRUSH COLLEGE ROAD CLOSED AT SOUTH END OF PROJECT LIMITS FROM E HICKORY ST TO E OLIVE ST. AND TRAFFIC TO UTILIZE PROPOSED DETOUR
- REDUCE BRUSH COLLEGE ROAD TO 2 LANES TO PROVIDE WORK ZONE FOR E HARRISON (WEST LEG)

CONSTRUCTION TO BE COMPLETED IN STAGE 1
- CONSTRUCT NEW CEMETERY ACCESS ROAD FROM E HARRISON STREET
- CONSTRUCT NEW JAMES STREET CONNECTION FROM FARIES PARKWAY TO LOGAN ST
- CONSTRUCT SOUTH PORTION OF RETAINING WALL SN 058-W007
- CONSTRUCT SOUTH PORTION OF BRUSH COLLEGE ROAD ROADWAY
- CONSTRUCT E HARRISON (WEST LEG) NEW ROADWAY CONNECTION
- CONSTRUCT PORTION OF BRUSH COLLEGE ROAD ADJACENT TO E HARRISON (WEST LEG)

STAGE 2

MAINTENANCE OF TRAFFIC ON BRUSH COLLEGE ROAD
- LANE WIDTHS REDUCED TO 11' SOUTH OF FARIES PARKWAY
- OFF-ROAD CONSTRUCTION ACTIVITY ALONG EAST SIDE OF BRUSH COLLEGE ROAD SOUTH OF FARIES PARKWAY

MAINTENANCE OF TRAFFIC ON FARIES PARKWAY
- LANES WIDTHS REDUCED TO 10' AT BRUSH COLLEGE ROAD INTERSECTION AND PAST JUG-HANDLE CONSTRUCTION
- WB LEFT TURN LANES REDUCED FROM 2 LANES TO 1 LANE AT BRUSH COLLEGE ROAD INTERSECTION
- EB THROUGH LANES REDUCED FROM 2 LANES TO 1 LANE AT BRUSH COLLEGE ROAD INTERSECTION

MAINTENANCE OF TRAFFIC ON LOGAN STREET
- WEST END OF LOGAN STREET TO BE CLOSED. ACCESS WILL UTILIZE NEW JAMES STREET CONNECTION TO FARIES PARKWAY
- TEMPORARY CONSTRUCTION ACCESS PROVIDED FOR LOGAN STREET DRIVEWAYS WHEN NO ALTERNATIVE ACCESS EXISTS

MAINTENANCE OF TRAFFIC ON OLIVE STREET
- WEST END OF OLIVE STREET TO BE CLOSED. ACCESS WILL UTILIZE NEW JAMES STREET CONNECTION TO FARIES PARKWAY

CONSTRUCTION TO BE COMPLETED IN STAGE 2
- REMAINING PORTION OF RETAINING WALL SN 058-W007
- EAST HALF OF BRUSH COLLEGE ROAD SOUTH OF THE JUG HANDLE CONNECTOR ROAD
- JUG HANDLE CONNECTOR ROAD
- RETAINING WALL SN 058-W006
- LOGAN STREET
- E HARRISON IC RR AT-GRADE CROSSING SIGNAL EQUIPMENT
- ADM PARKING LOT IMPROVEMENTS
- TEMPORARY TRAFFIC SIGNALS AT FARIES PARKWAY AND JUG HANDLE CONNECTOR ROAD INTERSECTION

STAGE 3A AND 3B

MAINTENANCE OF TRAFFIC ON BRUSH COLLEGE ROAD
- LANE WIDTHS REDUCED TO 11' SOUTH OF FARIES PARKWAY
- 1 LANE MAINTAINED IN EACH DIRECTION (NB/SB) SOUTH OF FARIES PARKWAY
- 1 LEFT TURN LANE AND 1 RIGHT TURN LANE PROVIDED AT THE JUG HANDLE INTERSECTION WITH FARIES PARKWAY
- BRUSH COLLEGE ROAD CLOSED NORTH OF FARIES PARKWAY AND TRAFFIC TO UTILIZE PROPOSED DETOUR
- 1 LANE IN EACH DIRECTION PROVIDED FOR ACCESS TO E HARRISON ST (WEST LEG)
- 1 LANE IN EACH DIRECTION PROVIDED TO SERVICE TRUCKING FACILITY
- ACCESS TO E HARRISON (EAST LEG) THROUGH E MUELLER AVE AND N 40TH ST

MAINTENANCE OF TRAFFIC ON FARIES PARKWAY
- LANES WIDTHS REDUCED TO 10' AT THE JUG HANDLE CONNECTOR ROAD INTERSECTION
- 1 LANE PROVIDED IN BOTH EB AND WB DIRECTION FOR EXTENT OF PROJECT LIMITS
- 1 WB LEFT TURN LANE PROVIDED AT JUG HANDLE INTERSECTION
- 1 EB RIGHT TURN LANE PROVIDED AT JUG HANDLE INTERSECTION
- LANES SHIFTED TO ACCOMMODATE PROPOSED SOUTH-HALF FARIES CONSTRUCTION

MAINTENANCE OF TRAFFIC ON LOGAN STREET
- JAMES STREET OPEN AT FARIES PARKWAY
- LOGAN STREET TRAFFIC TO UTILIZE THE NEW JUG HANDLE CONNECTION FOR ACCESS

MAINTENANCE OF TRAFFIC ON OLIVE STREET
- OLIVE STREET TRAFFIC TO UTILIZE LOGAN ST AND THE NEW JUG HANDLE CONNECTION FOR ACCESS

CONSTRUCTION TO BE COMPLETED IN STAGE 3
- CONSTRUCT CENTER BRIDGE PIER (SN 058-9202) ALONG FARIES PARKWAY
- BEGIN CONSTRUCTION NORTH AND SOUTH ABUTMENT (SN 058-9202)
- BEGIN CONSTRUCTION RETAINING WALL SN 058-W003 SOUTH OF FARIES PARKWAY
- BEGIN CONSTRUCTION RETAINING WALL SN 058-W004 NORTH OF FARIES PARKWAY
- CONSTRUCT SOUTH HALF OF FARIES PARKWAY ROADWAY
- CONSTRUCT BRUSH COLLEGE ROAD SOUTH OF E HARRISON ST (WEST LEG)
- CONSTRUCT WESTERN PORTION OF E HARRISON RD (EAST LEG)

STAGE 4A

MAINTENANCE OF TRAFFIC ON BRUSH COLLEGE ROAD
- MAINTAIN TRAFFIC PATTERN AND DETOUR IMPLEMENTED IN STAGE 3 SOUTH OF E HARRISON (EAST LEG)
- 1 LANE IN EACH DIRECTION PROVIDED TO SERVICE E HARRISON (WEST LEG) AND E HARRISON (EAST LEG) ROADWAYS

MAINTENANCE OF TRAFFIC ON FARIES PARKWAY
- 1 LANE PROVIDED IN BOTH EB AND WB DIRECTION FOR EXTENT OF PROJECT LIMITS
- 1 WB LEFT TURN LANE PROVIDED AT JUG HANDLE INTERSECTION
- 1 EB RIGHT TURN LANE PROVIDED AT JUG HANDLE INTERSECTION
- LANES SHIFTED TO ACCOMMODATE PROPOSED NORTH-HALF FARIES CONSTRUCTION

CONSTRUCTION TO BE COMPLETED IN STAGE 4A
- CONTINUE CONSTRUCTION OF NORTH AND SOUTH ABUTMENT (SN 058-9202)
- CONTINUE CONSTRUCTION OF RETAINING WALL SN 058-W003 SOUTH OF FARIES PARKWAY
- CONTINUE CONSTRUCTION OF RETAINING WALL SN 058-W004 NORTH OF FARIES PARKWAY
- CONSTRUCT NORTH HALF OF FARIES PARKWAY ROADWAY
- CONSTRUCT EAST HALF OF BRUSH COLLEGE ROAD NORTH OF E HARRISON ST (EAST LEG)
- RESURFACE E HARRISON RD (EAST LEG) EAST OF RECONSTRUCTION LIMITS
- CONSTRUCT TRAFFIC SIGNAL FOR NEW FARIES PARKWAY AND JUG HANDLE CONNECTOR ROAD INTERSECTION
- FARIES AT IC RR AT-GRADE CROSSING SIGNAL EQUIPMENT

STAGE 4B

MAINTENANCE OF TRAFFIC ON BRUSH COLLEGE ROAD
- MAINTAIN TRAFFIC PATTERN AND DETOUR FROM STAGE 4A

MAINTENANCE OF TRAFFIC ON FARIES PARKWAY
- MAINTAIN TRAFFIC PATTERN FROM STAGE 4A EXCEPT AS FOLLOWS:
- NO WB LEFT TURN LANE PROVIDED AT JUG HANDLE INTERSECTION

CONSTRUCTION TO BE COMPLETED IN STAGE 4B
- CONTINUE ALL CONSTRUCTION IN STAGE 4A
- CONSTRUCT THE MEDIANS ON FAIRES PARKWAY EAST OF BRUSH COLLEGE ROAD AND WEST OF N JAMES ST

STAGE 4C

MAINTENANCE OF TRAFFIC ON BRUSH COLLEGE ROAD
- MAINTAIN TRAFFIC PATTERN AND DETOUR FROM STAGE 4A

MAINTENANCE OF TRAFFIC ON FARIES PARKWAY
- MAINTAIN TRAFFIC PATTERN FROM STAGE 4B EXCEPT AS FOLLOWS:
- SHIFT WB LANE ONTO NORTH SIDE OF FAIRES PARKWAY FROM EASTERN PROJECT LIMIT TO JUG HANDLE INTERSECTION
- SHIFT WB LANE ONTO SOUTH SIDE OF FAIRES PARKWAY AT JUG HANDLE INTERSECTION

CONSTRUCTION TO BE COMPLETED IN STAGE 4B
- CONTINUE ALL CONSTRUCTION IN STAGE 4A
- CONSTRUCT THE MEDIANS ON FAIRES PARKWAY EAST OF N JAMES ST TO THE EASTERN PROJECT LIMIT

STAGE 5

MAINTENANCE OF TRAFFIC ON BRUSH COLLEGE ROAD
- MAINTAIN TRAFFIC PATTERN AND DETOUR IMPLEMENTED IN STAGE 3 SOUTH OF FARIES PARKWAY
- 2-WAY OPERATION RESUMES ON NORTH END OF BRUSH COLLEGE ROAD AND E HARRISON (EAST LEG) ROADWAY

MAINTENANCE OF TRAFFIC ON FARIES PARKWAY
- FARIES PARKWAY TRAFFIC RESUMES NORMAL OPERATIONS WITH THE EXCEPTION OF BELOW:
- ONLY 1 WB LEFT TURN LANE PROVIDED AT JUG HANDLE INTERSECTION
- SHORT TERM 8 HOUR CLOSURES ON EB AND WB FARIES REQUIRED, SEE TEMPORARY DETOUR PLAN

CONSTRUCTION TO BE COMPLETED IN STAGE 5
- COMPLETE CONSTRUCTION OF NORTH AND SOUTH ABUTMENT (SN 058-9202)
- COMPLETE BRUSH COLLEGE ROAD BRIDGE STRUCTURE (SN 058-9202)
- COMPLETE CONSTRUCTION OF RETAINING WALL SN 058-W003 SOUTH OF FARIES PARKWAY
- COMPLETE CONSTRUCTION OF RETAINING WALL SN 058-W004 NORTH OF FARIES PARKWAY
- FARIES PARKWAY MEDIAN WEST OF IC RR TRACKS
- REMAINING BRUSH COLLEGE ROADWAY LEADING UP TO SN 058-9202
- CONSTRUCT TRAFFIC SIGNAL FOR NEW BRUSH COLLEGE ROAD AND JUG HANDLE CONNECTOR ROAD INTERSECTION
- COMPLETE ROADWAY LIGHTING FOR BRUSH COLLEGE ROAD AND INTERSECTIONS

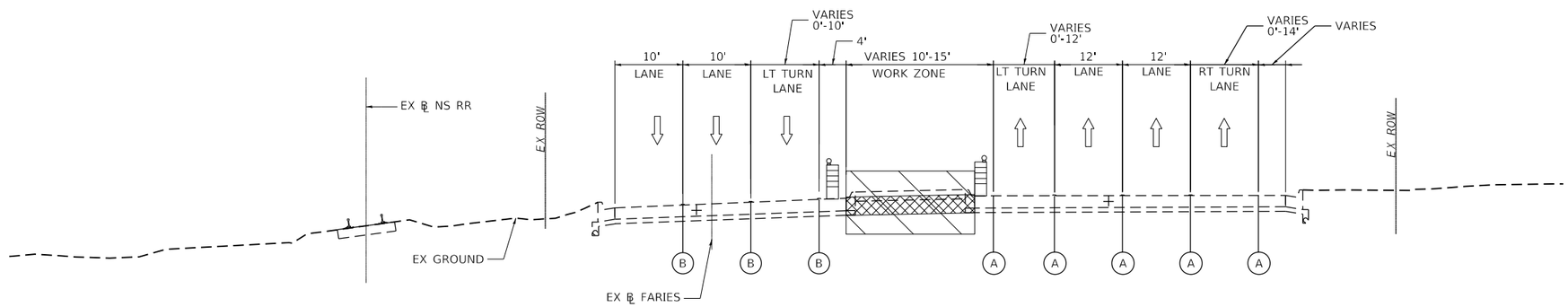

PRE-STAGE A - FARIES PARKWAY

LOOKING EAST

PR ℄ FARIES STA 205+00.00 TO STA 209+72

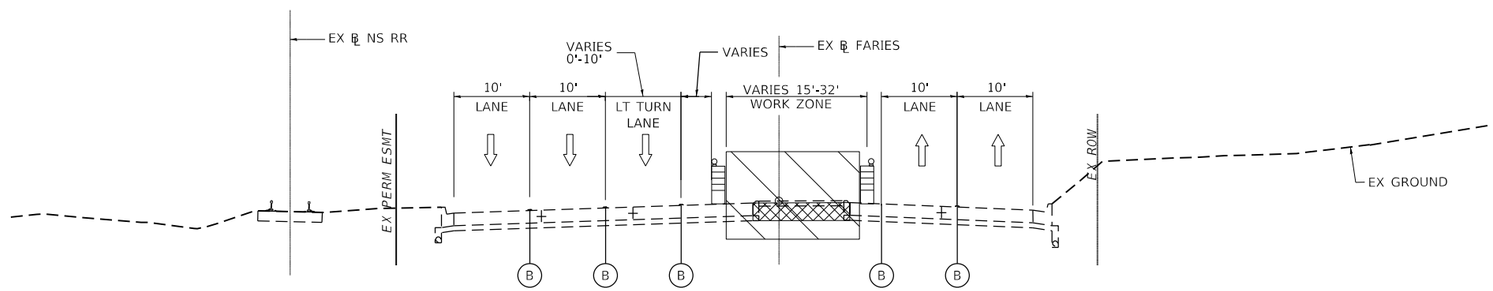

PRE-STAGE A - FARIES PARKWAY

LOOKING EAST

PR ℄ FARIES STA 211+00.00 TO STA 215+50.00

LEGEND

- (A) EXISTING PAVEMENT MARKINGS
- (B) TEMPORARY PAVEMENT MARKINGS
- DIRECTIONAL ARROW
- TEMPORARY CONCRETE BARRIER
- DRUM OR BARRICADE TYPE II WITH STEADY BURN MONODIRECTIONAL LIGHT
- WORK ZONE
- TEMPORARY PAVEMENT
- PREVIOUSLY COMPLETED PAVEMENT

AECOM
345 EAST ASH AVENUE, SUITE B
DECATUR, IL 62526
PHONE: (217) 775-6065

USER NAME = maura.lakowski	DESIGNED - MA	REVISED -
	DRAWN - MA	REVISED -
PLOT SCALE = 20.0000 ' / in.	CHECKED - ML	REVISED -
PLOT DATE = 11/5/2020	DATE - 10/30/2020	REVISED -

STATE OF ILLINOIS
DEPARTMENT OF TRANSPORTATION

SUGGESTED STAGES OF CONSTRUCTION AND TRAFFIC CONTROL TYPICAL SECTIONS

SCALE: 1=10' | SHEET 1 OF SHEETS | STA. TO STA.

F.A.U. RTE.	SECTION	COUNTY	TOTAL SHEETS	SHEET NO.
7448	09-00933-01-BR	MACON	996	176

CONTRACT NO. XXXX(XXX)

ILLINOIS | FED. AID PROJECT

MODEL: Default
FILE NAME: pw:\\aecom-na-pw.bentley.com:AECOM_DS16_NA\Documents\60603202-Brush College\900-CAD GIS\910_CAD\03_SHEETS\01_AECOM\Typical Sections\New Typical Sections\MOT Typical Sections\60603202_MOT_TypSec_PreStage_A_01_Faries_01.dgn

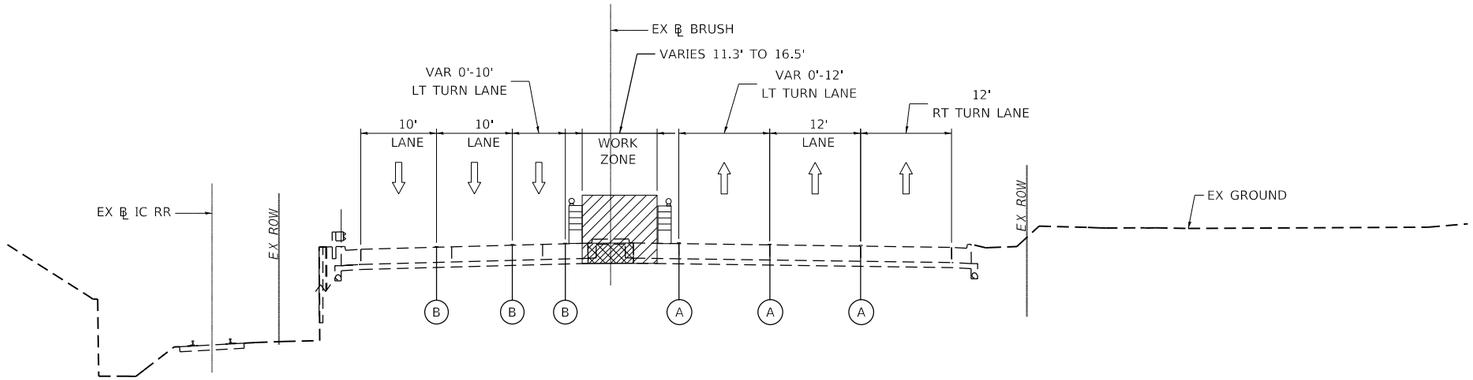

PRE-STAGE A - BRUSH COLLEGE ROAD

LOOKING NORTH

PR ℄ BRUSH STA 57+20.00 TO STA 60+55.00

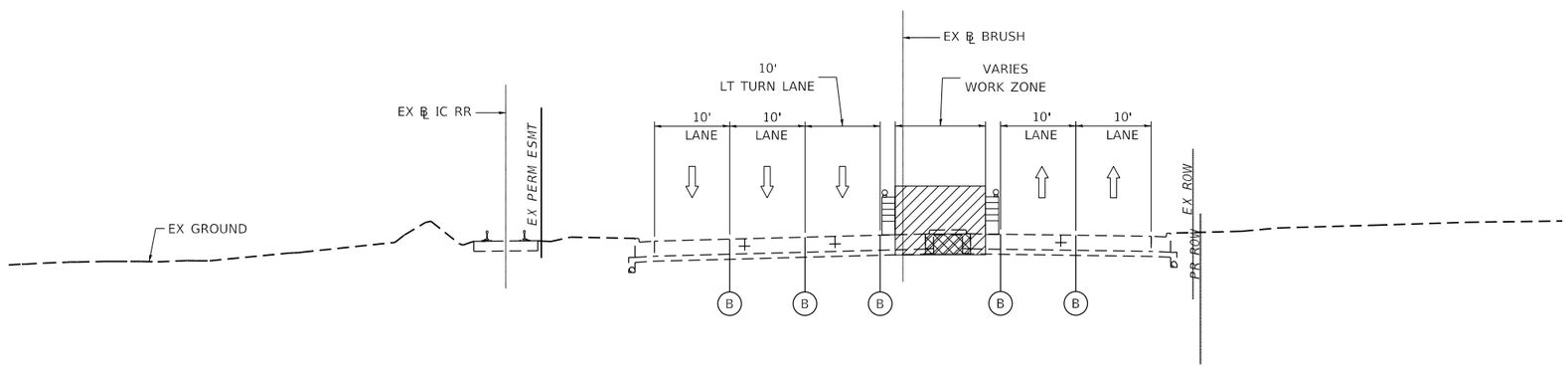

PRE-STAGE A - BRUSH COLLEGE ROAD

LOOKING NORTH

PR ℄ BRUSH STA 62+00.00 TO STA 64+20.00

LEGEND

- (A) EXISTING PAVEMENT MARKINGS
- (B) TEMPORARY PAVEMENT MARKINGS
- DIRECTIONAL ARROW
- TEMPORARY CONCRETE BARRIER
- DRUM OR BARRICADE TYPE II WITH STEADY BURN MONODIRECTIONAL LIGHT
- WORK ZONE
- TEMPORARY PAVEMENT
- PREVIOUSLY COMPLETED PAVEMENT

AECOM
345 EAST ASH AVENUE, SUITE B
DECATUR, IL 62526
PHONE: (217) 775-6065

USER NAME = maura.lakowski	DESIGNED - MA	REVISED -
	DRAWN - MA	REVISED -
PLOT SCALE = 20.0000 ' / in.	CHECKED - ML	REVISED -
PLOT DATE = 11/5/2020	DATE - 10/30/2020	REVISED -

STATE OF ILLINOIS
DEPARTMENT OF TRANSPORTATION

SUGGESTED STAGES OF CONSTRUCTION AND TRAFFIC CONTROL TYPICAL SECTIONS

SCALE: 1=10' | SHEET 2 OF SHEETS | STA. TO STA.

F.A.U. RTE.	SECTION	COUNTY	TOTAL SHEETS	SHEET NO.
7448	09-00933-01-BR	MACON	996	177

CONTRACT NO. XXXX(XXX)

ILLINOIS | FED. AID PROJECT

MODEL: Default
FILE NAME: pw:\\aecom-na-pw.bentley.com:AECOM_DS16_NA\Documents\60603202-Brush College\900-CAD GIS\910_CAD\03_SHEETS\01_AECOM\Typical Sections\New Typical Sections\MOT Typical Sections\60603202_MOT_TypSec_PreStage_A_02_BCR_02.dgn

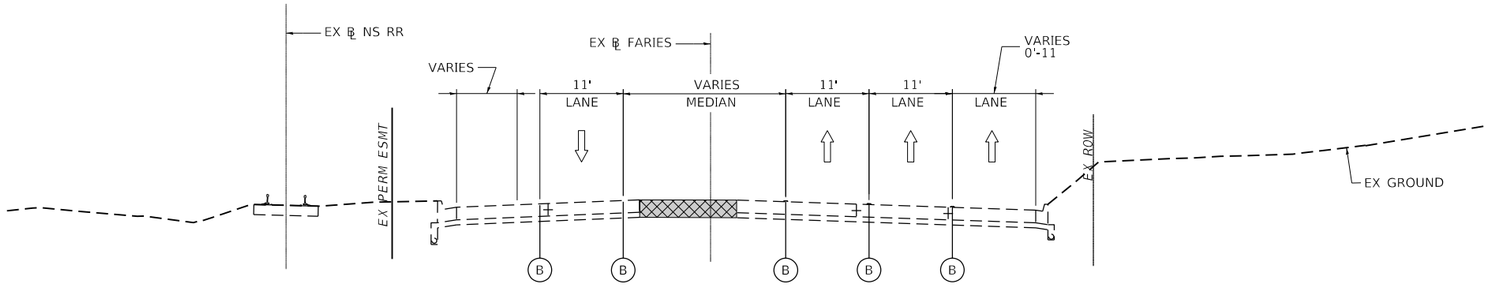

PRE-STAGE B - FARIES PARKWAY

LOOKING EAST
PR ℄ FARIES STA 205+00 TO STA 208+00

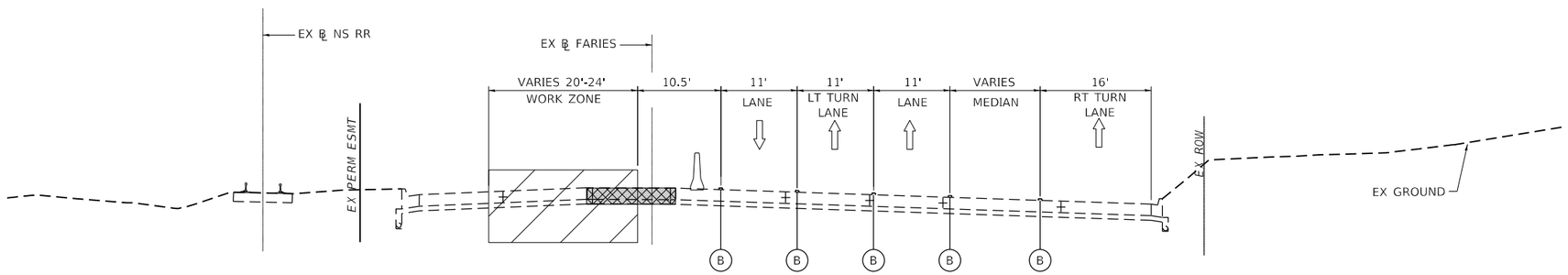

PRE-STAGE B - FARIES PARKWAY

LOOKING EAST
PR ℄ FARIES STA 208+00 TO STA 210+25

LEGEND

- (A) EXISTING PAVEMENT MARKINGS
- (B) TEMPORARY PAVEMENT MARKINGS
- DIRECTIONAL ARROW
- TEMPORARY CONCRETE BARRIER
- DRUM OR BARRICADE TYPE II WITH STEADY BURN MONODIRECTIONAL LIGHT
- WORK ZONE
- TEMPORARY PAVEMENT
- PREVIOUSLY COMPLETED PAVEMENT

AECOM
345 EAST ASH AVENUE, SUITE B
DECATUR, IL 62526
PHONE: (217) 775-6065

USER NAME = maura.lakowski	DESIGNED - MA	REVISED -	
	DRAWN - MA	REVISED -	
PLOT SCALE = 20.0000 ' / in.	CHECKED - ML	REVISED -	
PLOT DATE = 11/5/2020	DATE - 10/30/2020	REVISED -	

STATE OF ILLINOIS
DEPARTMENT OF TRANSPORTATION

SUGGESTED STAGES OF CONSTRUCTION AND TRAFFIC CONTROL TYPICAL SECTIONS

SCALE: 1=10' | SHEET 3 OF SHEETS | STA. TO STA.

F.A.U. RTE.	SECTION	COUNTY	TOTAL SHEETS	SHEET NO.
7448	09-00933-01-BR	MACON	996	178
		CONTRACT NO. XXXX(XXX)		
		ILLINOIS	FED. AID PROJECT	

MODEL: Default
FILE NAME: pw:\\aecom=na=pw.bentley.com:AECOM_DS16_NA\Documents\60603202-Brush College\900-CAD GIS\910_CAD\03_SHEETS\01_AECOM\Typical Sections\New Typical Sections\MOT Typical Sections\60603202_MOT_TypSec_PreStage_B_03_Faries_01.dgn

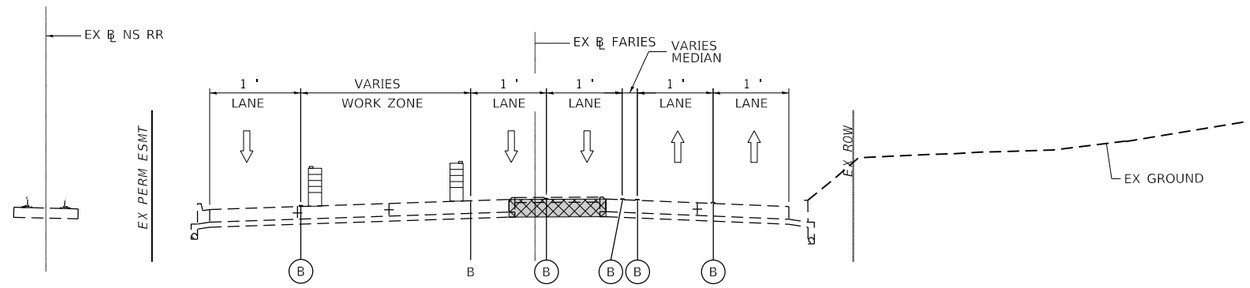

PR -

LOOKING EAST
PR ℄ FARIES STA 211+00 TO STA 217+50

LEGEND

(A)	EXISTING PAVEMENT MARKINGS		TEMPORARY CONCRETE BARRIER		WORK ZONE
B	TEMPORARY PAVEMENT MARKINGS		DRUM OR BARRICADE TYPE II WITH STEADY BURN MONODIRECTIONAL LIGHT		TEMPORARY PAVEMENT
	DIRECTIONAL ARROW				PREVIOUSLY COMPLETED PAVEMENT

AECOM
345 EAST ASH AVENUE, SUITE B
DECATUR, IL 62526
PHON . -

USER NAME = maur .lakowski	DESIGNED - MA	REVISED -	
	DRAWN - MA	REVISED -	
PLOT SCALE = 2 ' / ı .	CHECKED - ML	REVISED -	
PLOT DATE = 11/5/2020	DATE - 10/30/2020	REVISED -	

STATE O I
DEPARTMENT OF TRANSPORTA I

SUGGESTED STAGES OF CONSTRUC I
TRAF I

SCAL : 1=1 ' | SHEET 4 OF SHEETS | ST . TO ST .

RT .	SECTION	COUNTY	TOTAL SHEETS	SHEET N .
7448	0 -	MACON	996	179
		CONTRACT N .		
	ILLINOIS	FE .		

MODE : Default
FILE NAM : p :\aeco . le : _DS16_NA\Documents\6060320 - llege\90 - \910_CAD\03_SHEETS\01_AECOM\Typi I Secti \New Typi I Secti \MOT Typi I Secti \6060320_MOT_TypSec_PreStage_B_04_Fari _0 .

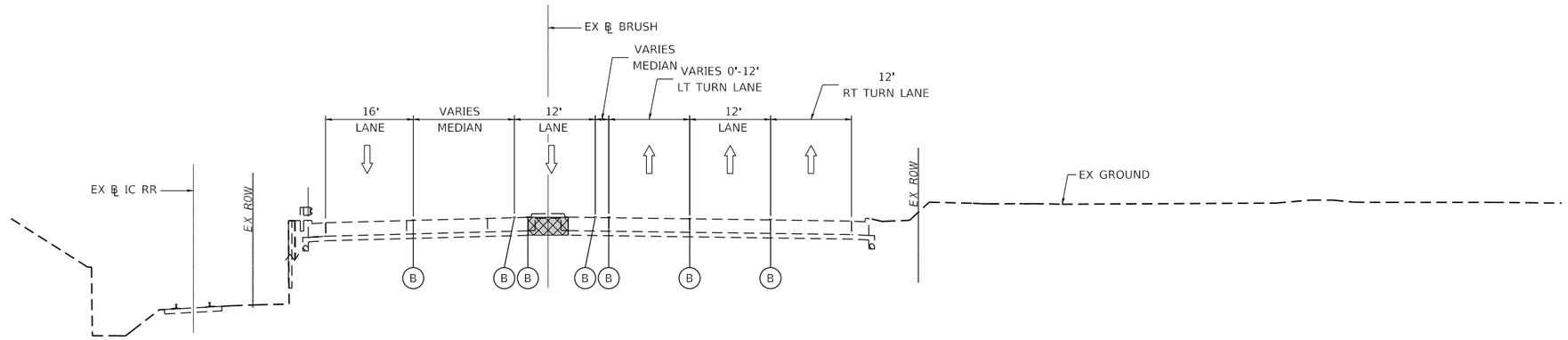

PRE-STAGE B - BRUSH COLLEGE ROAD

LOOKING NORTH

PR ℄ BRUSH STA 56+15 TO STA 59+10

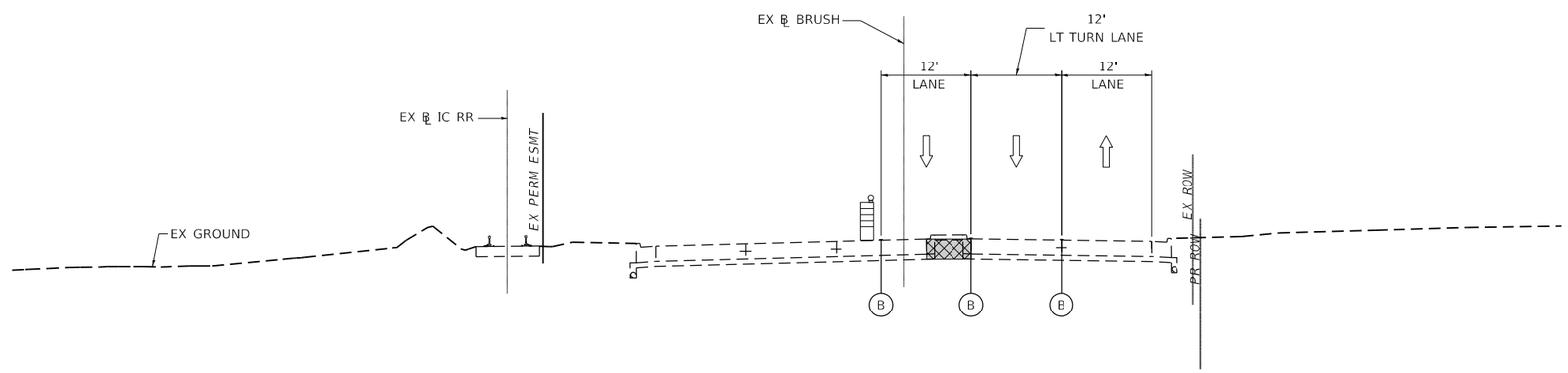

PRE-STAGE B - BRUSH COLLEGE ROAD

LOOKING NORTH

PR ℄ BRUSH STA 59+10 TO STA 64+70

LEGEND

- (A) EXISTING PAVEMENT MARKINGS
- (B) TEMPORARY PAVEMENT MARKINGS
- DIRECTIONAL ARROW
- TEMPORARY CONCRETE BARRIER
- DRUM OR BARRICADE TYPE II WITH STEADY BURN MONODIRECTIONAL LIGHT
- WORK ZONE
- TEMPORARY PAVEMENT
- PREVIOUSLY COMPLETED PAVEMENT

AECOM
345 EAST ASH AVENUE, SUITE B
DECATUR, IL 62526
PHONE: (217) 775-6065

USER NAME = maura.lakowski	DESIGNED - MA	REVISED -	
	DRAWN - MA	REVISED -	
PLOT SCALE = 20.0000 ' / in.	CHECKED - ML	REVISED -	
PLOT DATE = 11/5/2020	DATE - 10/30/2020	REVISED -	

STATE OF ILLINOIS
DEPARTMENT OF TRANSPORTATION

SUGGESTED STAGES OF CONSTRUCTION AND TRAFFIC CONTROL TYPICAL SECTIONS

SCALE: 1=10' | SHEET 5 OF SHEETS | STA. TO STA.

F.A.U. RTE.	SECTION	COUNTY	TOTAL SHEETS	SHEET NO.
7448	09-00933-01-BR	MACON	996	180
		CONTRACT NO. XXXX(XXX)		
	ILLINOIS	FED. AID PROJECT		

MODEL: Default
FILE NAME: pw:\\aecom-na-pw.bentley.com:AECOM_DS16_NA\Documents\60603202-Brush College\900-CAD GIS\910_CAD\03_SHEETS\01_AECOM\Typical Sections\New Typical Sections\MOT Typical Sections\60603202_MOT_TypSec_PreStage_B_05_BCR_01.dgn

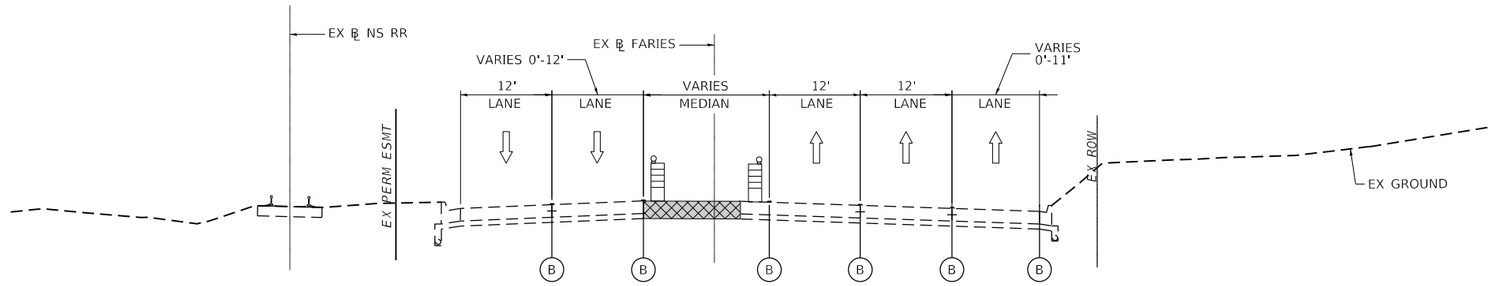

PRE-STAGE C - FARIES PARKWAY

LOOKING EAST
PR ℄ FARIES STA 205+00 TO STA 208+00

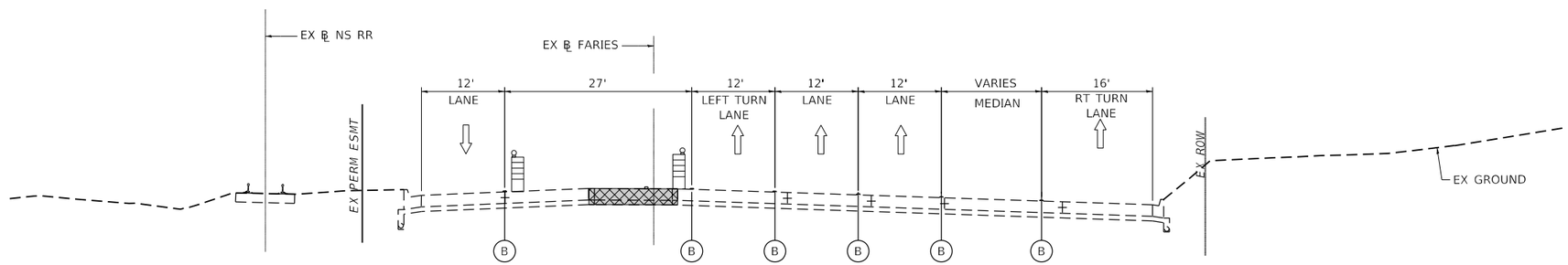

PRE-STAGE C - FARIES PARKWAY

LOOKING EAST
PR ℄ FARIES STA 208+00 TO STA 210+00

LEGEND

- (A) EXISTING PAVEMENT MARKINGS
- (B) TEMPORARY PAVEMENT MARKINGS
- DIRECTIONAL ARROW
- TEMPORARY CONCRETE BARRIER
- DRUM OR BARRICADE TYPE II WITH STEADY BURN MONODIRECTIONAL LIGHT
- WORK ZONE
- TEMPORARY PAVEMENT
- PREVIOUSLY COMPLETED PAVEMENT

AECOM
345 EAST ASH AVENUE, SUITE B
DECATUR, IL 62526
PHONE: (217) 775-6065

USER NAME = maura.lakowski	DESIGNED - MA	REVISED -	
	DRAWN - MA	REVISED -	
PLOT SCALE = 20.0000 ' / in.	CHECKED - ML	REVISED -	
PLOT DATE = 11/5/2020	DATE - 10/30/2020	REVISED -	

STATE OF ILLINOIS
DEPARTMENT OF TRANSPORTATION

SUGGESTED STAGES OF CONSTRUCTION AND TRAFFIC CONTROL TYPICAL SECTIONS

SCALE: 1=10' | SHEET 6 OF SHEETS | STA. TO STA.

F.A.U. RTE.	SECTION	COUNTY	TOTAL SHEETS	SHEET NO.
7448	09-00933-01-BR	MACON	996	181

CONTRACT NO. XXXX(XXX)

ILLINOIS | FED. AID PROJECT

MODEL: Default
FILE NAME: pw:\\aecom-na-pw.bentley.com:AECOM_DS16_NA\Documents\60603202-Brush College\900-CAD GIS\910_CAD\03_SHEETS\01_AECOM\Typical Sections\New Typical Sections\MOT Typical Sections\60603202_MOT_TypSec_PreStage_C_06_Faries_01.dgn

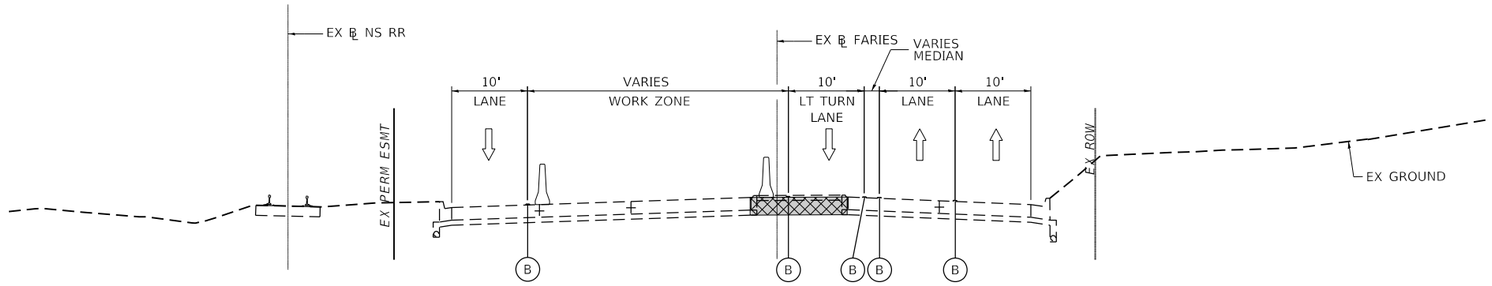

PRE-STAGE C - FARIES PARKWAY

LOOKING EAST
PR ℄ FARIES STA 211+00 TO STA 212+00

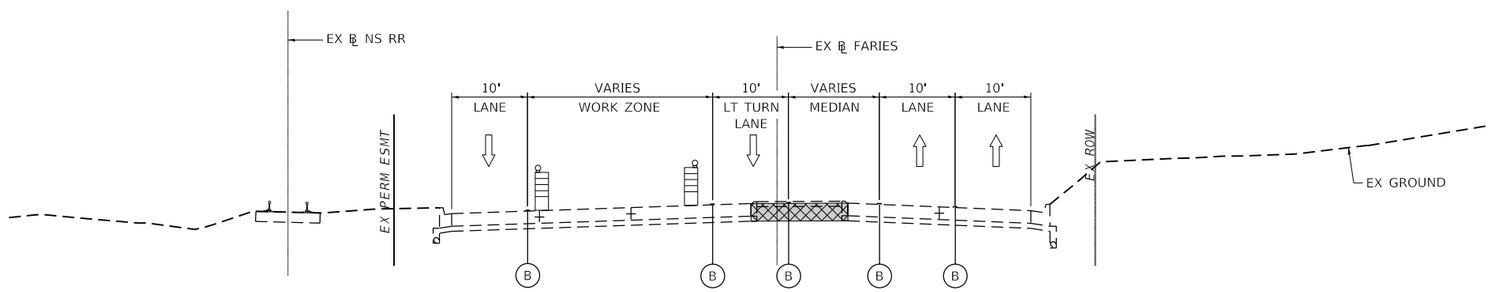

PRE-STAGE C - FARIES PARKWAY

LOOKING EAST
PR ℄ FARIES STA 212+00.00 TO STA 217+50.00

LEGEND

- (A) EXISTING PAVEMENT MARKINGS
- (B) TEMPORARY PAVEMENT MARKINGS
- DIRECTIONAL ARROW
- TEMPORARY CONCRETE BARRIER
- DRUM OR BARRICADE TYPE II WITH STEADY BURN MONODIRECTIONAL LIGHT
- WORK ZONE
- TEMPORARY PAVEMENT
- PREVIOUSLY COMPLETED PAVEMENT

AECOM
345 EAST ASH AVENUE, SUITE B
DECATUR, IL 62526
PHONE: (217) 775-6065

USER NAME = maura.lakowski	DESIGNED - MA	REVISED -	
	DRAWN - MA	REVISED -	
PLOT SCALE = 20.0000 ' / in.	CHECKED - ML	REVISED -	
PLOT DATE = 11/5/2020	DATE - 10/30/2020	REVISED -	

STATE OF ILLINOIS
DEPARTMENT OF TRANSPORTATION

SUGGESTED STAGES OF CONSTRUCTION AND TRAFFIC CONTROL TYPICAL SECTIONS

SCALE: 1=10' | SHEET 7 OF SHEETS | STA. TO STA.

F.A.U. RTE.	SECTION	COUNTY	TOTAL SHEETS	SHEET NO.
7448	09-00933-01-BR	MACON	996	182

CONTRACT NO. XXXX(XXX)

ILLINOIS | FED. AID PROJECT

MODEL: Default
FILE NAME: pw:\\aecom-nasjw.bentley.com:AECOM_DS16_NA\Documents\60603202-Brush College\900-CAD GIS\910_CAD\03_SHEETS\01_AECOM\Typical Sections\New Typical Sections\MOT Typical Sections\60603202_MOT_TypSec_PreStage_C_07_Faries_02.dgn

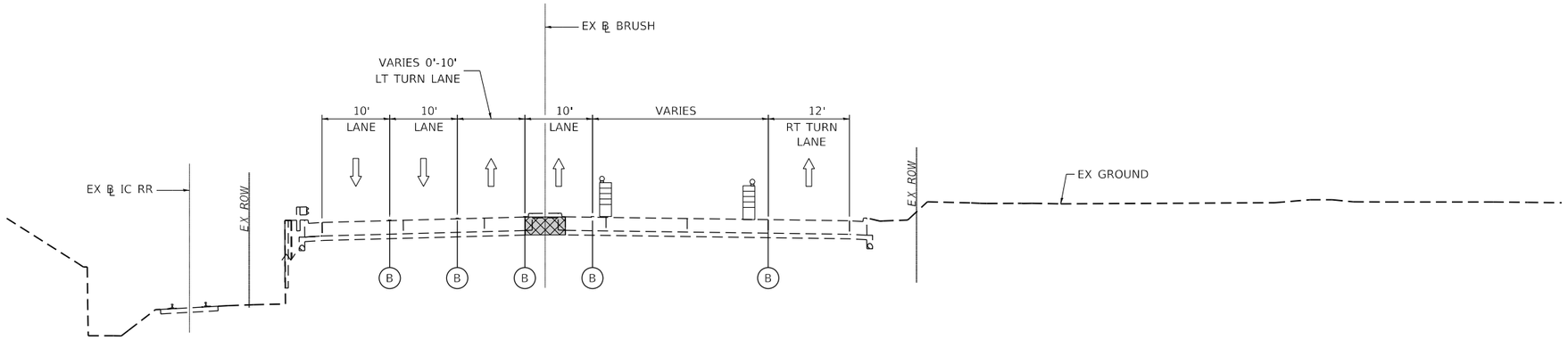

PRE-STAGE C - BRUSH COLLEGE ROAD

LOOKING NORTH

PR ℄ BRUSH STA 56+15 TO STA 60+40

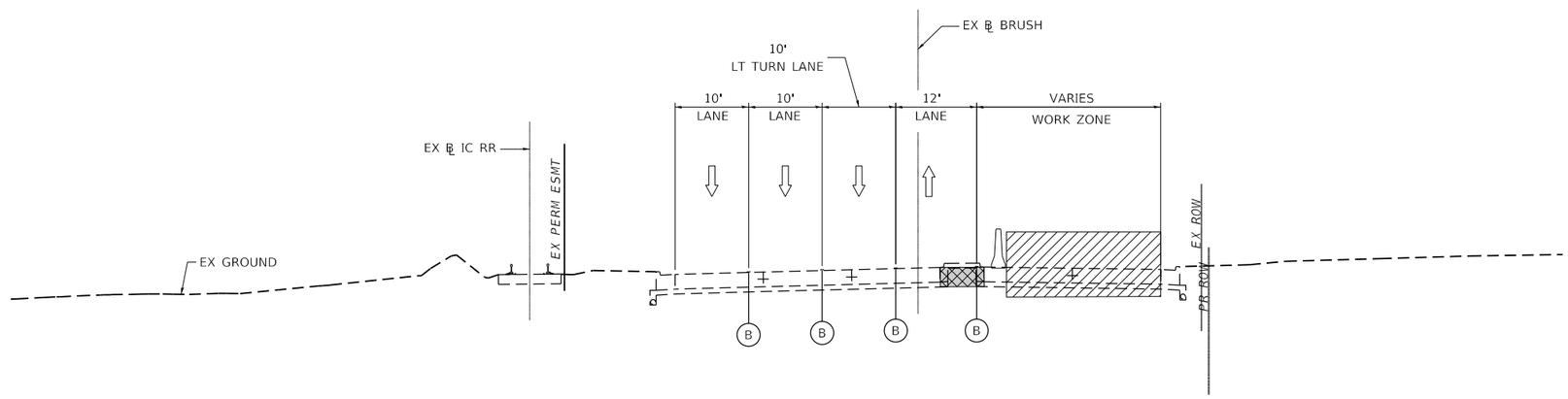

PRE-STAGE C - BRUSH COLLEGE ROAD

LOOKING NORTH

PR ℄ BRUSH STA 62+00 TO STA 64+70

LEGEND

- (A) EXISTING PAVEMENT MARKINGS
- (B) TEMPORARY PAVEMENT MARKINGS
- DIRECTIONAL ARROW
- TEMPORARY CONCRETE BARRIER
- DRUM OR BARRICADE TYPE II WITH STEADY BURN MONODIRECTIONAL LIGHT
- WORK ZONE
- TEMPORARY PAVEMENT
- PREVIOUSLY COMPLETED PAVEMENT

AECOM
345 EAST ASH AVENUE, SUITE B
DECATUR, IL 62526
PHONE: (217) 775-6065

USER NAME = maura.lakowski	DESIGNED - MA	REVISED -	
	DRAWN - MA	REVISED -	
PLOT SCALE = 20.0000 ' / in.	CHECKED - ML	REVISED -	
PLOT DATE = 11/5/2020	DATE - 10/30/2020	REVISED -	

STATE OF ILLINOIS
DEPARTMENT OF TRANSPORTATION

SUGGESTED STAGES OF CONSTRUCTION AND TRAFFIC CONTROL TYPICAL SECTIONS

SCALE: 1=10' | SHEET 8 OF SHEETS | STA. TO STA.

F.A.U. RTE.	SECTION	COUNTY	TOTAL SHEETS	SHEET NO.
7448	09-00933-01-BR	MACON	996	183

CONTRACT NO. XXXX(XXX)

ILLINOIS | FED. AID PROJECT

MODEL: Default
FILE NAME: pw:\\aecom-na.pw.bentley.com:AECOM_DS16_NA\Documents\60603202-Brush College\900-CAD GIS\910_CAD\03_SHEETS\01_AECOM\Typical Sections\New Typical Sections\MOT Typical Sections\60603202_MOT_TypSec_PreStage_C_08_BCR_01.dgn

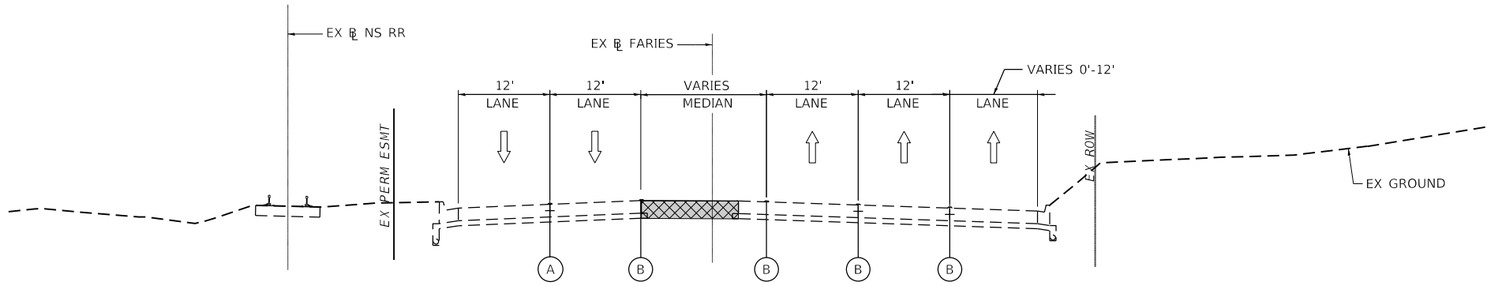

STAGE 1 - FARIES PARKWAY

LOOKING EAST
PR ℄ FARIES STA 205+00 TO STA 207+00

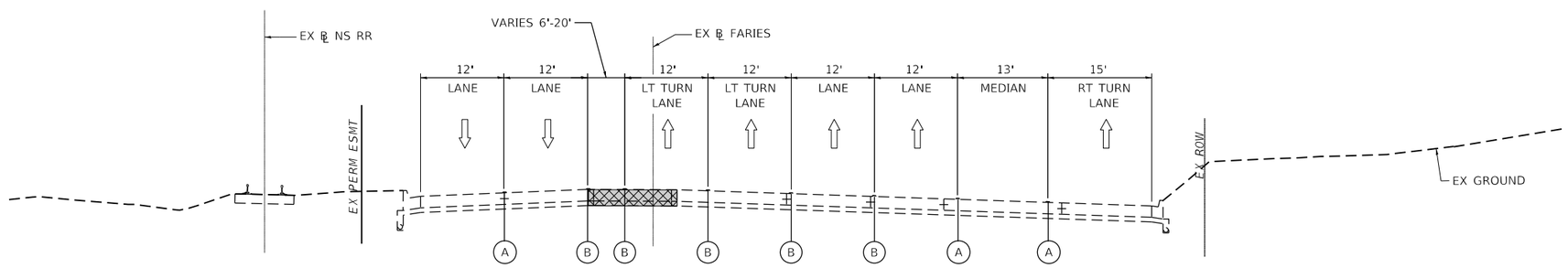

STAGE 1 - FARIES PARKWAY

LOOKING EAST
PR ℄ FARIES STA 207+00 TO STA 209+68

LEGEND

- (A) EXISTING PAVEMENT MARKINGS
- (B) TEMPORARY PAVEMENT MARKINGS
- DIRECTIONAL ARROW
- TEMPORARY CONCRETE BARRIER
- DRUM OR BARRICADE TYPE II WITH STEADY BURN MONODIRECTIONAL LIGHT
- WORK ZONE
- TEMPORARY PAVEMENT
- PREVIOUSLY COMPLETED PAVEMENT

AECOM
345 EAST ASH AVENUE, SUITE B
DECATUR, IL 62526
PHONE: (217) 775-6065

USER NAME = maura.lakowski	DESIGNED - MA	REVISED -	
	DRAWN - MA	REVISED -	
PLOT SCALE = 20.0000 ' / in.	CHECKED - ML	REVISED -	
PLOT DATE = 11/5/2020	DATE - 10/30/2020	REVISED -	

STATE OF ILLINOIS
DEPARTMENT OF TRANSPORTATION

SUGGESTED STAGES OF CONSTRUCTION AND TRAFFIC CONTROL TYPICAL SECTIONS

SCALE: 1=10' | SHEET 9 OF SHEETS | STA. TO STA.

F.A.U. RTE.	SECTION	COUNTY	TOTAL SHEETS	SHEET NO.
7448	09-00933-01-BR	MACON	996	184

CONTRACT NO. XXXX(XXX)

ILLINOIS | FED. AID PROJECT

MODEL: Default
FILE NAME: pw:\\aecom=na=pw.bentley.com:AECOM_DS16_NA\Documents\60603202-Brush College\900-CAD GIS\910_CAD\03_SHEETS\01_AECOM\Typical Sections\New Typical Sections\MOT Typical Sections\60603202_MOT_TypSec_Stage_1_09_Faries_01.dgn

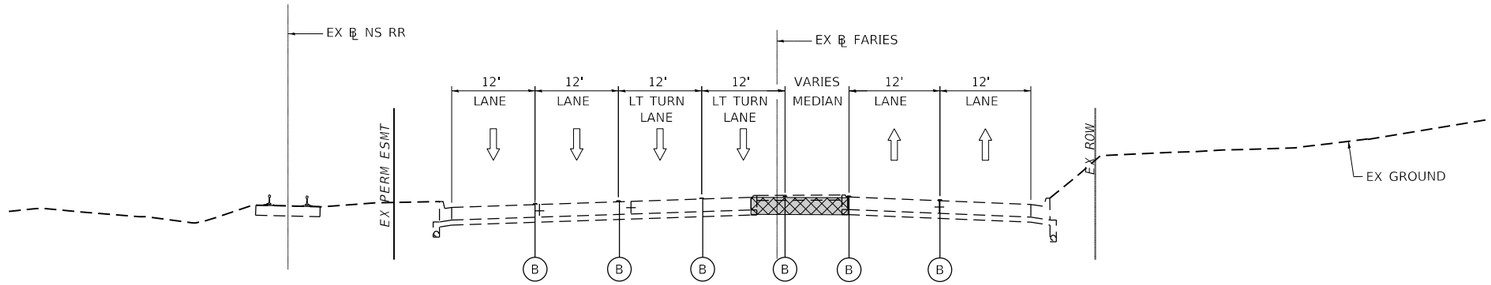

STAGE 1 - FARIES PARKWAY

LOOKING EAST
PR ℄ FARIES STA 211+00 TO STA 215+00

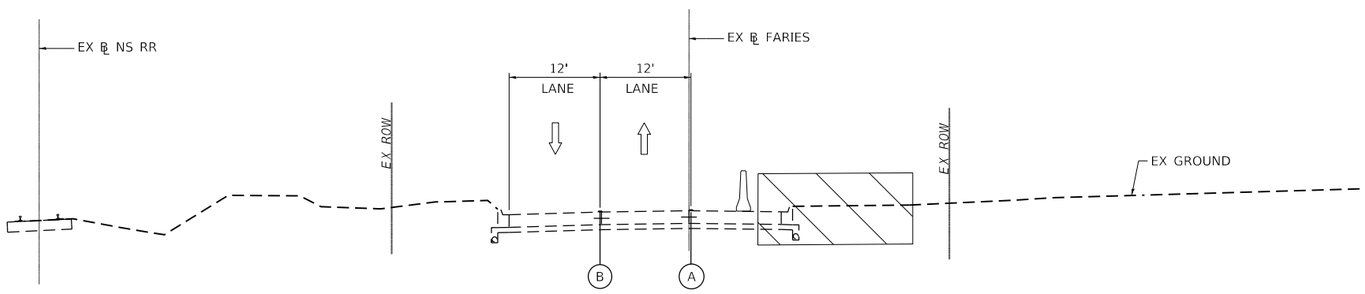

STAGE 1 - FARIES PARKWAY

LOOKING EAST
PR ℄ FARIES STA 222+50 TO STA 224+50

LEGEND

- (A) EXISTING PAVEMENT MARKINGS
- (B) TEMPORARY PAVEMENT MARKINGS
- DIRECTIONAL ARROW
- TEMPORARY CONCRETE BARRIER
- DRUM OR BARRICADE TYPE II WITH STEADY BURN MONODIRECTIONAL LIGHT
- WORK ZONE
- TEMPORARY PAVEMENT
- PREVIOUSLY COMPLETED PAVEMENT

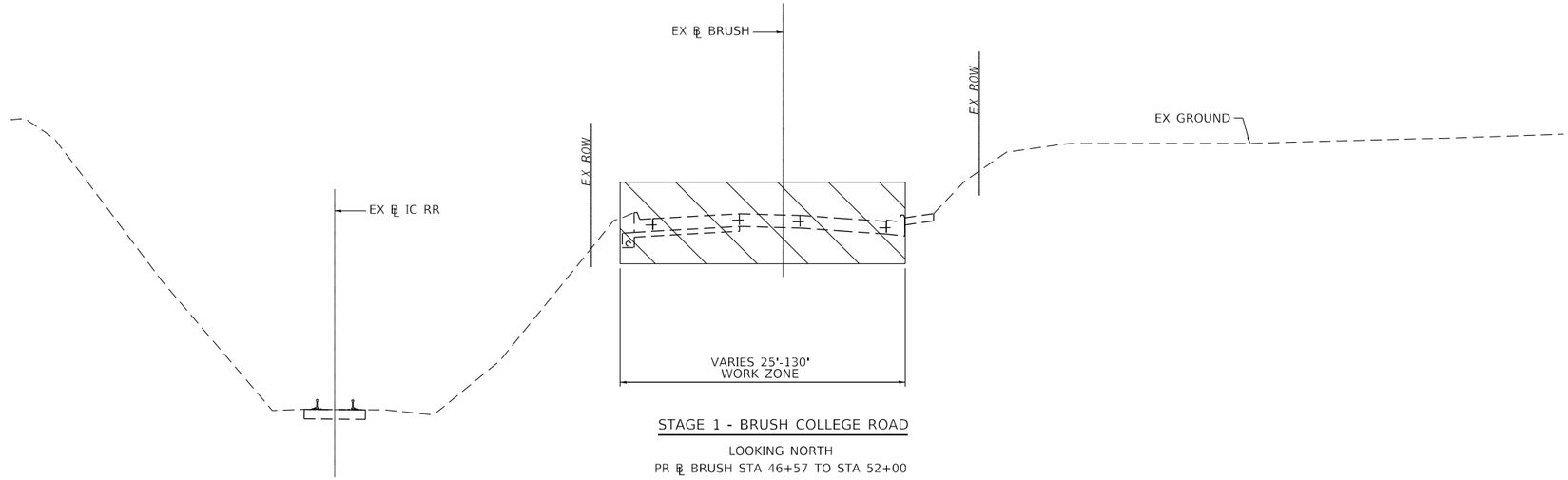

STAGE 1 - BRUSH COLLEGE ROAD

LOOKING NORTH
PR ℄ BRUSH STA 46+57 TO STA 52+00

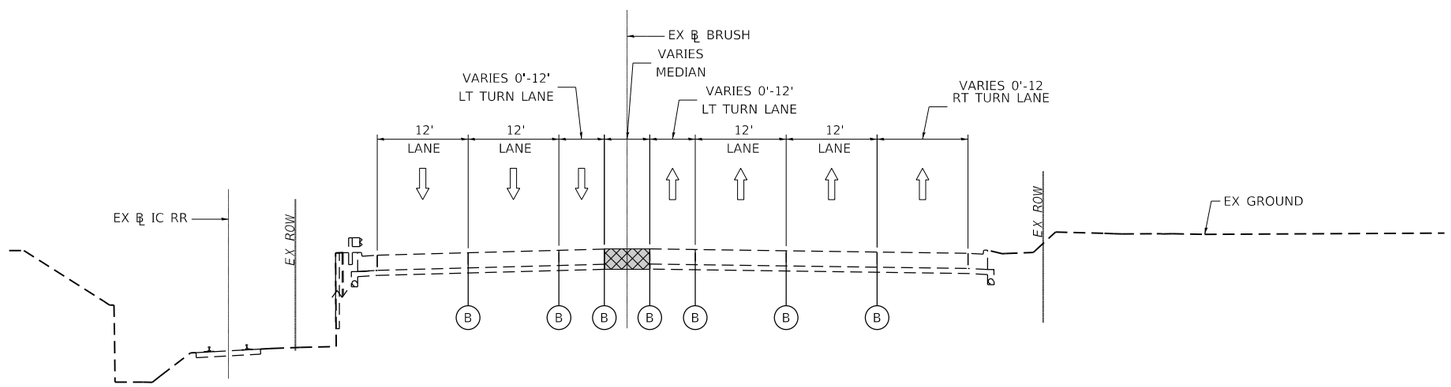

STAGE 1 - BRUSH COLLEGE ROAD

LOOKING NORTH
PR ℄ BRUSH STA 56+15 TO STA 60+55

LEGEND

- (A) EXISTING PAVEMENT MARKINGS
- (B) TEMPORARY PAVEMENT MARKINGS
- DIRECTIONAL ARROW
- TEMPORARY CONCRETE BARRIER
- DRUM OR BARRICADE TYPE II WITH STEADY BURN MONODIRECTIONAL LIGHT
- WORK ZONE
- TEMPORARY PAVEMENT
- PREVIOUSLY COMPLETED PAVEMENT

AECOM
345 EAST ASH AVENUE, SUITE B
DECATUR, IL 62526
PHONE: (217) 775-6065

USER NAME = maura.lakowski	DESIGNED - MA	REVISED -	
	DRAWN - MA	REVISED -	
PLOT SCALE = 20.0000 ' / in.	CHECKED - ML	REVISED -	
PLOT DATE = 11/5/2020	DATE - 10/30/2020	REVISED -	

STATE OF ILLINOIS
DEPARTMENT OF TRANSPORTATION

SUGGESTED STAGES OF CONSTRUCTION AND TRAFFIC CONTROL TYPICAL SECTIONS

SCALE: 1=10' | SHEET 11 OF SHEETS | STA. TO STA.

F.A.U. RTE.	SECTION	COUNTY	TOTAL SHEETS	SHEET NO.
7448	09-00933-01-BR	MACON	996	186
		CONTRACT NO. XXXX(XXX)		
	ILLINOIS	FED. AID PROJECT		

MODEL: Default
FILE NAME: pw:\\aecom-na-pw.bentley.com:AECOM_DS16_NA\Documents\60603202-Brush College\900-CAD GIS\910_CAD\03_SHEETS\01_AECOM\Typical Sections\New Typical Sections\MOT Typical Sections\60603202_MOT_TypSec_Stage_1_11_BCR_01.dgn

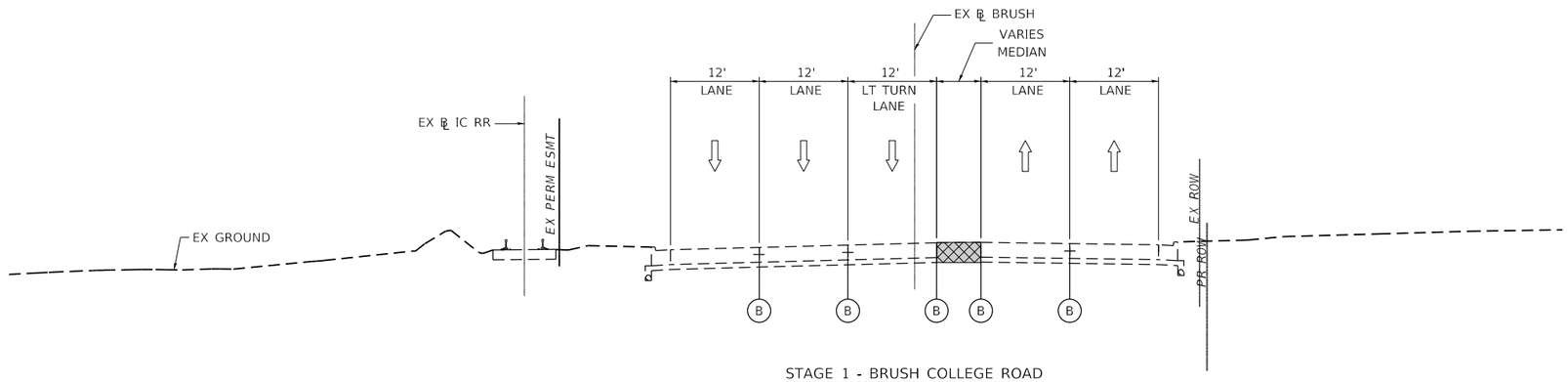

STAGE 1 - BRUSH COLLEGE ROAD

LOOKING NORTH

PR ℄ BRUSH STA 62+00 TO STA 65+00

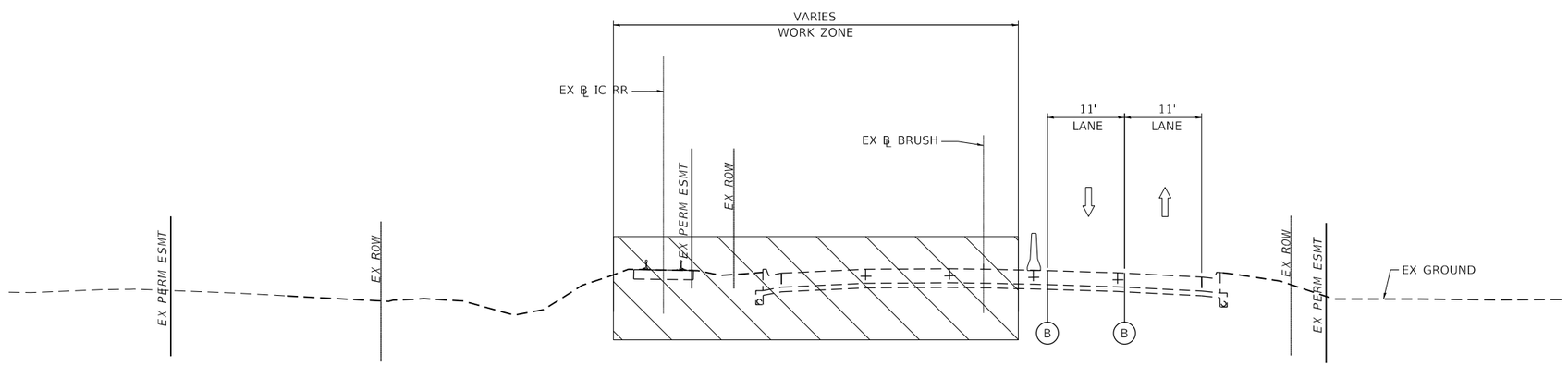

STAGE 1 - BRUSH COLLEGE ROAD

LOOKING NORTH

PR ℄ BRUSH STA 72+00 TO STA 75+00

LEGEND

- (A) EXISTING PAVEMENT MARKINGS
- (B) TEMPORARY PAVEMENT MARKINGS
- DIRECTIONAL ARROW
- TEMPORARY CONCRETE BARRIER
- DRUM OR BARRICADE TYPE II WITH STEADY BURN MONODIRECTIONAL LIGHT
- WORK ZONE
- TEMPORARY PAVEMENT
- PREVIOUSLY COMPLETED PAVEMENT

AECOM
345 EAST ASH AVENUE, SUITE B
DECATUR, IL 62526
PHONE: (217) 775-6065

USER NAME = maura.lakowski	DESIGNED - MA	REVISED -	
	DRAWN - MA	REVISED -	
PLOT SCALE = 20.0000 ' / in.	CHECKED - ML	REVISED -	
PLOT DATE = 11/5/2020	DATE - 10/30/2020	REVISED -	

STATE OF ILLINOIS
DEPARTMENT OF TRANSPORTATION

SUGGESTED STAGES OF CONSTRUCTION AND TRAFFIC CONTROL TYPICAL SECTIONS

SCALE: 1=10' | SHEET 12 OF SHEETS | STA. TO STA.

F.A.U. RTE.	SECTION	COUNTY	TOTAL SHEETS	SHEET NO.
7448	09-00933-01-BR	MACON	996	187

CONTRACT NO. XXXX(XXX)

ILLINOIS | FED. AID PROJECT

MODEL: Default
FILE NAME: pw:\\aecom-na-pw.bentley.com:AECOM_DS16_NA\Documents\60603202-Brush College\900-CAD GIS\910_CAD\03_SHEETS\01_AECOM\Typical Sections\New Typical Sections\MOT Typical Sections\60603202_MOT_TypSec_Stage_1_12_BCR_02.dgn

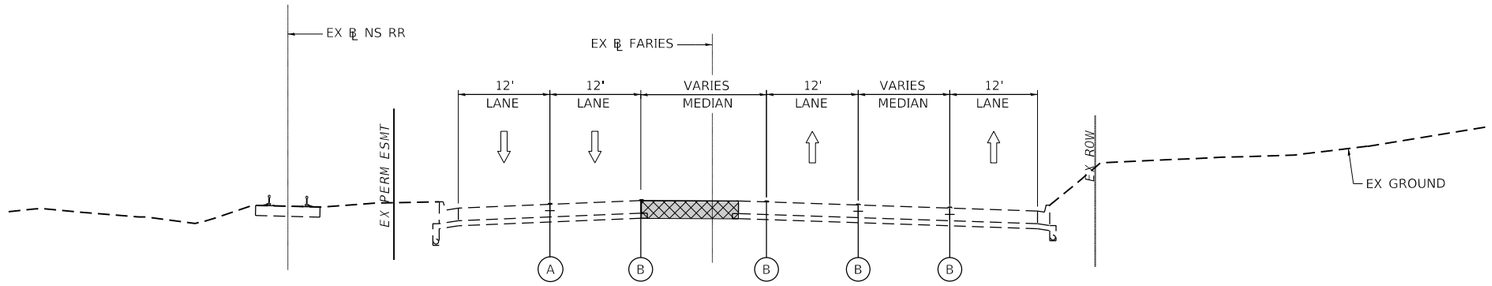

STAGE 2 - FARIES PARKWAY

LOOKING EAST
PR ℄ FARIES STA 205+00 TO STA 207+00

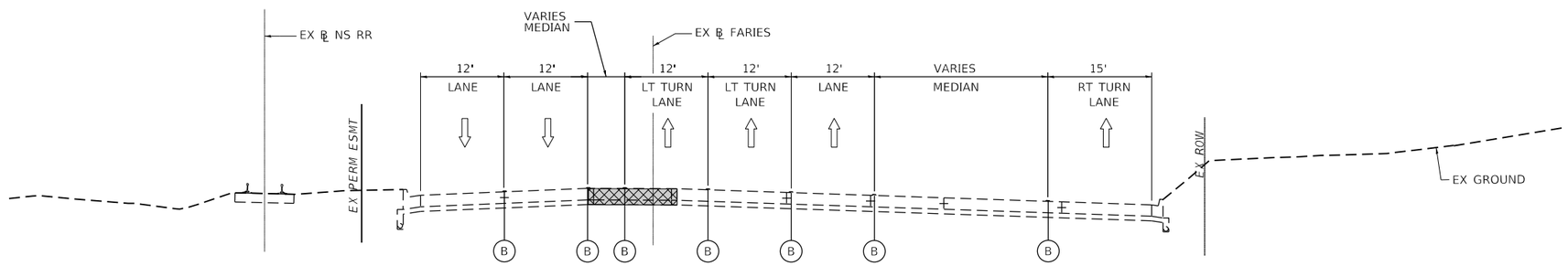

STAGE 2 - FARIES PARKWAY

LOOKING EAST
PR ℄ FARIES STA 207+00 TO STA 209+68

LEGEND

- (A) EXISTING PAVEMENT MARKINGS
- (B) TEMPORARY PAVEMENT MARKINGS
- DIRECTIONAL ARROW
- TEMPORARY CONCRETE BARRIER
- DRUM OR BARRICADE TYPE II WITH STEADY BURN MONODIRECTIONAL LIGHT
- WORK ZONE
- TEMPORARY PAVEMENT
- PREVIOUSLY COMPLETED PAVEMENT

AECOM
345 EAST ASH AVENUE, SUITE B
DECATUR, IL 62526
PHONE: (217) 775-6065

USER NAME = maura.lakowski	DESIGNED - MA	REVISED -	
	DRAWN - MA	REVISED -	
PLOT SCALE = 20.0000 ' / in.	CHECKED - ML	REVISED -	
PLOT DATE = 11/5/2020	DATE - 10/30/2020	REVISED -	

STATE OF ILLINOIS
DEPARTMENT OF TRANSPORTATION

SUGGESTED STAGES OF CONSTRUCTION AND TRAFFIC CONTROL TYPICAL SECTIONS

SCALE: 1=10' | SHEET 13 OF SHEETS | STA. TO STA.

F.A.U. RTE.	SECTION	COUNTY	TOTAL SHEETS	SHEET NO.
7448	09-00933-01-BR	MACON	996	188
		CONTRACT NO. XXXX(XXX)		
		ILLINOIS FED. AID PROJECT		

MODEL: Default
FILE NAME: pw:\\aecom=na=pw.bentley.com:AECOM_DS16_NA\Documents\60603202-Brush College\900-CAD GIS\910_CAD\03_SHEETS\01_AECOM\Typical Sections\New Typical Sections\MOT Typical Sections\60603202_MOT_TypSec_Stage_2_13_Faries_01.dgn

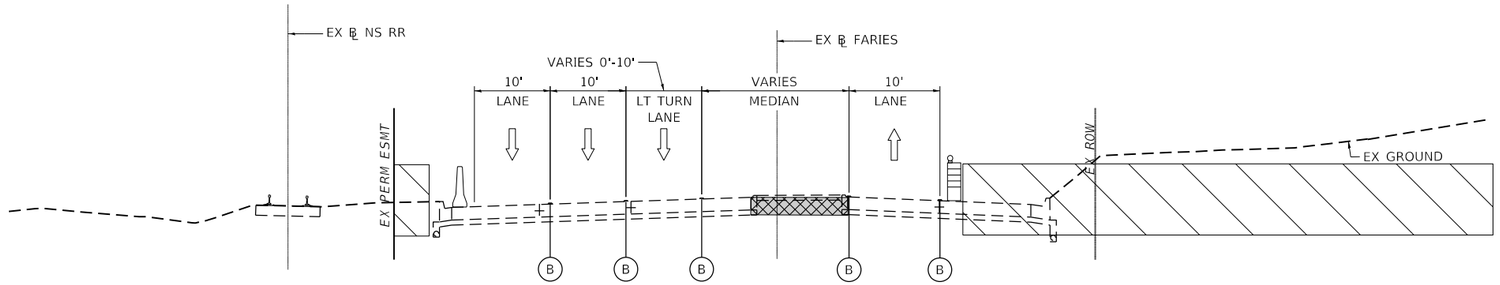

STAGE 2 - FARIES PARKWAY

LOOKING EAST
PR ℄ FARIES STA 211+00 TO STA 215+00

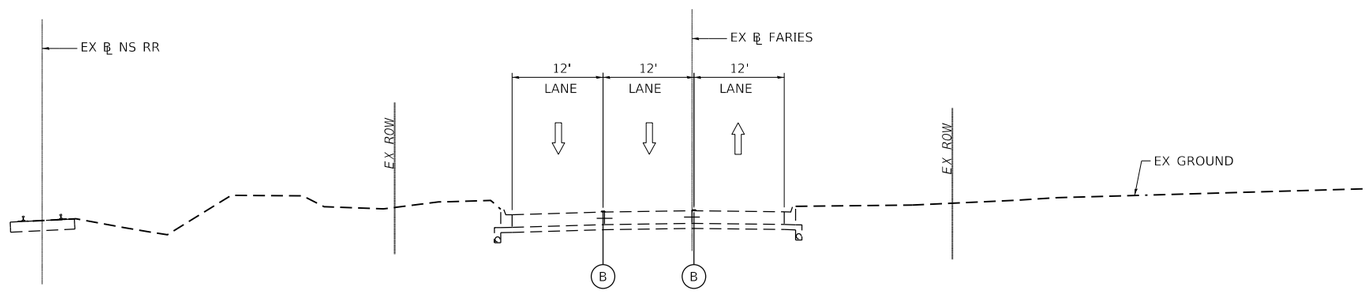

STAGE 2 - FARIES PARKWAY

LOOKING EAST
PR ℄ FARIES STA 222+50 TO STA 224+50

LEGEND

- (A) EXISTING PAVEMENT MARKINGS
- (B) TEMPORARY PAVEMENT MARKINGS
- DIRECTIONAL ARROW
- TEMPORARY CONCRETE BARRIER
- DRUM OR BARRICADE TYPE II WITH STEADY BURN MONODIRECTIONAL LIGHT
- WORK ZONE
- TEMPORARY PAVEMENT
- PREVIOUSLY COMPLETED PAVEMENT

MODEL: Default
FILE NAME: pw:\\aecom-na-pw.bentley.com:AECOM_DS16_NA\Documents\60603202-Brush College\900-CAD GIS\910_CAD\03_SHEETS\01_AECOM\Typical Sections\New Typical Sections\MOT Typical Sections\60603202_MOT_TypSec_Stage_2_14_Faries_02.dgn

AECOM
345 EAST ASH AVENUE, SUITE B
DECATUR, IL 62526
PHONE: (217) 775-6065

USER NAME = maura.lakowski	DESIGNED - MA	REVISED -	
	DRAWN - MA	REVISED -	
PLOT SCALE = 20.0000 ' / in.	CHECKED - ML	REVISED -	
PLOT DATE = 11/5/2020	DATE - 10/30/2020	REVISED -	

STATE OF ILLINOIS
DEPARTMENT OF TRANSPORTATION

SUGGESTED STAGES OF CONSTRUCTION AND TRAFFIC CONTROL TYPICAL SECTIONS

SCALE: 1=10' | SHEET 14 OF SHEETS | STA. TO STA.

F.A.U. RTE.	SECTION	COUNTY	TOTAL SHEETS	SHEET NO.
7448	09-00933-01-BR	MACON	996	189

CONTRACT NO. XXXX(XXX)

ILLINOIS | FED. AID PROJECT

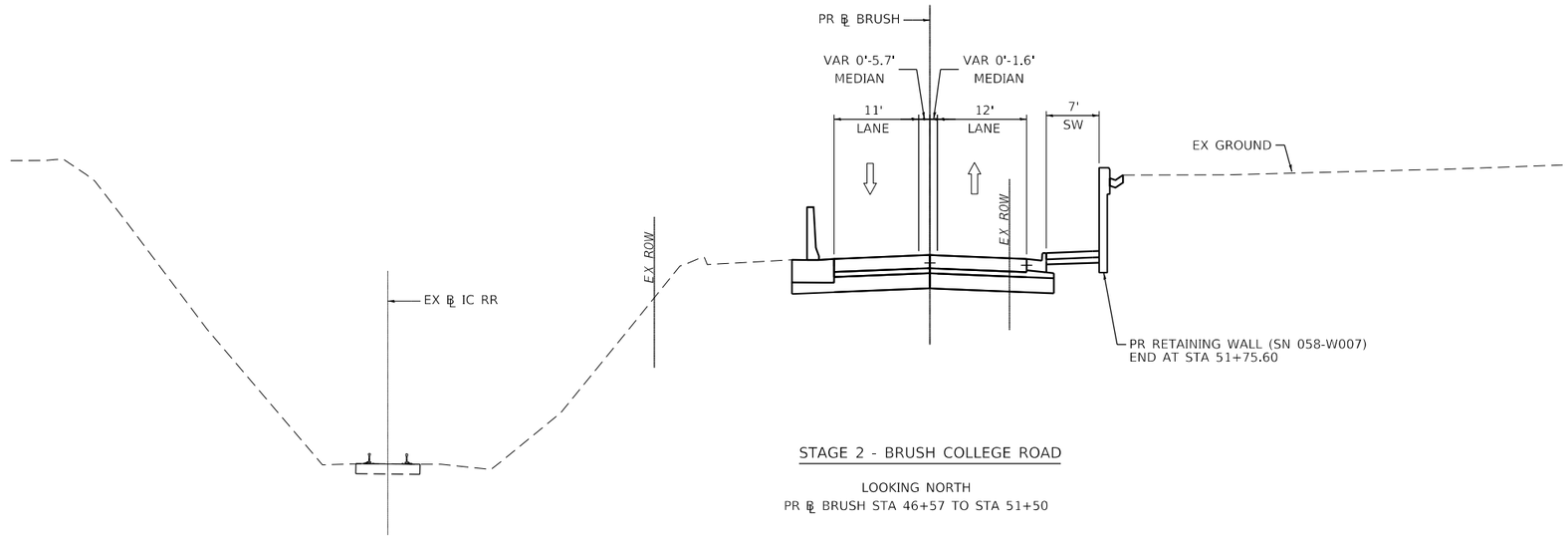

STAGE 2 - BRUSH COLLEGE ROAD

LOOKING NORTH
PR ℄ BRUSH STA 46+57 TO STA 51+50

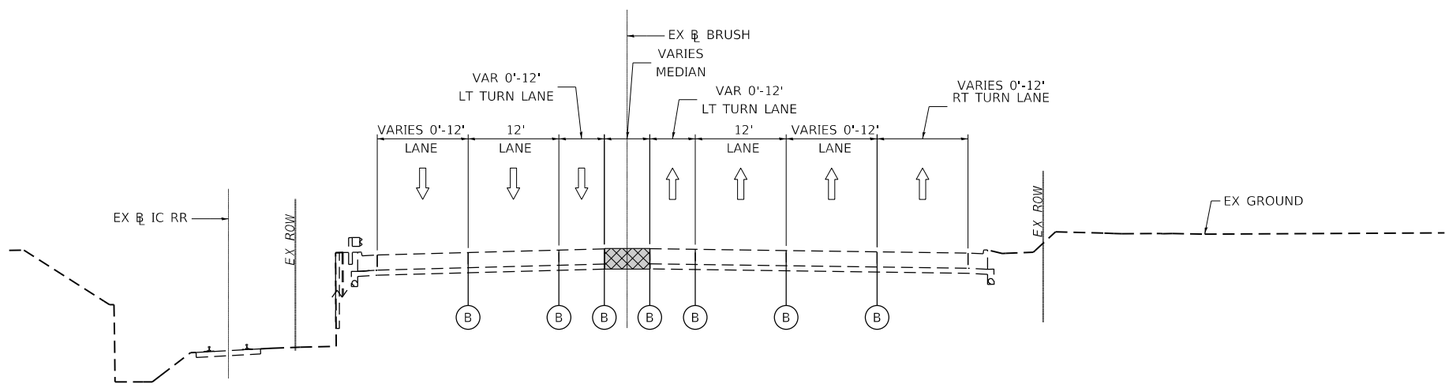

STAGE 2 - BRUSH COLLEGE ROAD

LOOKING NORTH
PR ℄ BRUSH STA 51+50 + STA 60+55

LEGEND

- (A) EXISTING PAVEMENT MARKINGS
- (B) TEMPORARY PAVEMENT MARKINGS
- DIRECTIONAL ARROW
- TEMPORARY CONCRETE BARRIER
- DRUM OR BARRICADE TYPE II WITH STEADY BURN MONODIRECTIONAL LIGHT
- WORK ZONE
- TEMPORARY PAVEMENT
- PREVIOUSLY COMPLETED PAVEMENT

AECOM
345 EAST ASH AVENUE, SUITE B
DECATUR, IL 62526
PHONE: (217) 775-6065

USER NAME = maura.lakowski	DESIGNED - MA	REVISED -	
	DRAWN - MA	REVISED -	
PLOT SCALE = 20.0000 ' / in.	CHECKED - ML	REVISED -	
PLOT DATE = 11/5/2020	DATE - 10/30/2020	REVISED -	

STATE OF ILLINOIS
DEPARTMENT OF TRANSPORTATION

SUGGESTED STAGES OF CONSTRUCTION AND TRAFFIC CONTROL TYPICAL SECTIONS

SCALE: 1=10' | SHEET 15 OF SHEETS | STA. TO STA.

F.A.U. RTE.	SECTION	COUNTY	TOTAL SHEETS	SHEET NO.
7448	09-00933-01-BR	MACON	996	190

CONTRACT NO. XXXX(XXX)

ILLINOIS | FED. AID PROJECT

MODEL: Default
FILE NAME: pw:\\aecom=na=pw.bentley.com:AECOM_DS16_NA\Documents\60603202-Brush College\900-CAD GIS\910_CAD\03_SHEETS\01_AECOM\Typical Sections\New Typical Sections\MOT Typical Sections\60603202_MOT_TypSec_Stage_2_15_BCR_01.dgn

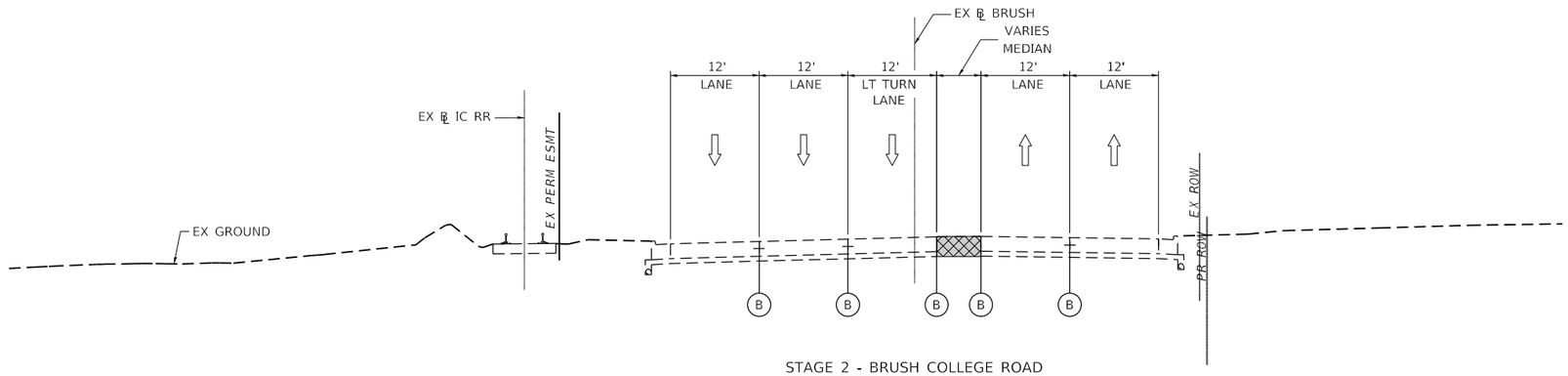

STAGE 2 - BRUSH COLLEGE ROAD

LOOKING NORTH

PR ℄ BRUSH STA 62+00 TO STA 65+00

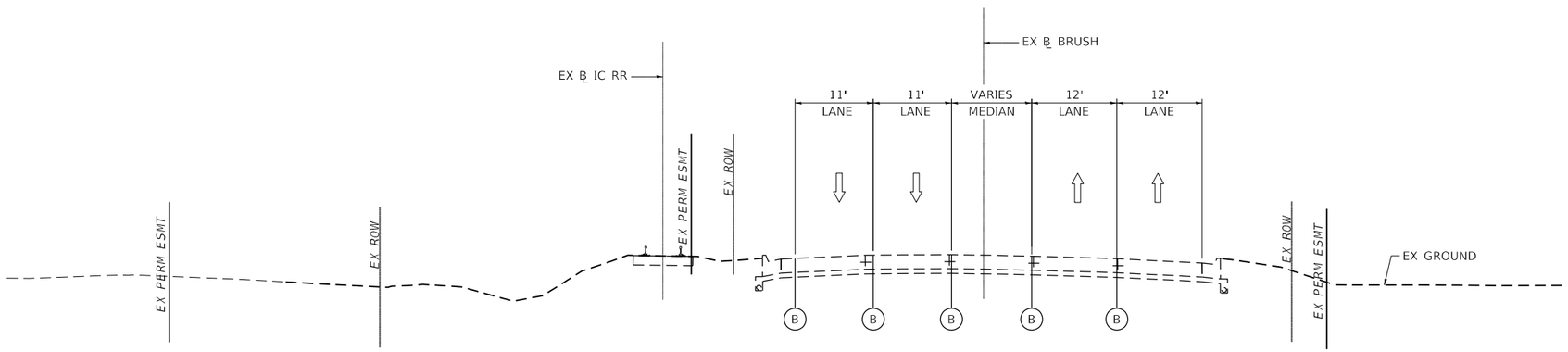

STAGE 2 - BRUSH COLLEGE ROAD

LOOKING NORTH

PR ℄ BRUSH STA 70+00 TO STA 72+00

LEGEND

- (A) EXISTING PAVEMENT MARKINGS
- (B) TEMPORARY PAVEMENT MARKINGS
- DIRECTIONAL ARROW
- TEMPORARY CONCRETE BARRIER
- DRUM OR BARRICADE TYPE II WITH STEADY BURN MONODIRECTIONAL LIGHT
- WORK ZONE
- TEMPORARY PAVEMENT
- PREVIOUSLY COMPLETED PAVEMENT

AECOM
345 EAST ASH AVENUE, SUITE B
DECATUR, IL 62526
PHONE: (217) 775-6065

USER NAME = maura.lakowski	DESIGNED - MA	REVISED -	
	DRAWN - MA	REVISED -	
PLOT SCALE = 20.0000 ' / in.	CHECKED - ML	REVISED -	
PLOT DATE = 11/5/2020	DATE - 10/30/2020	REVISED -	

STATE OF ILLINOIS
DEPARTMENT OF TRANSPORTATION

SUGGESTED STAGES OF CONSTRUCTION AND TRAFFIC CONTROL TYPICAL SECTIONS

SCALE: 1=10' | SHEET 16 OF SHEETS | STA. TO STA.

F.A.U. RTE.	SECTION	COUNTY	TOTAL SHEETS	SHEET NO.
7448	09-00933-01-BR	MACON	996	191
		CONTRACT NO. XXXX(XXX)		
	ILLINOIS	FED. AID PROJECT		

MODEL: Default
FILE NAME: pw:\\aecom-na-pw.bentley.com:AECOM_DS16_NA\Documents\60603202-Brush College\900-CAD GIS\910_CAD\03_SHEETS\01_AECOM\Typical Sections\New Typical Sections\MOT Typical Sections\60603202_MOT_TypSec_Stage_2_16_BCR_02.dgn

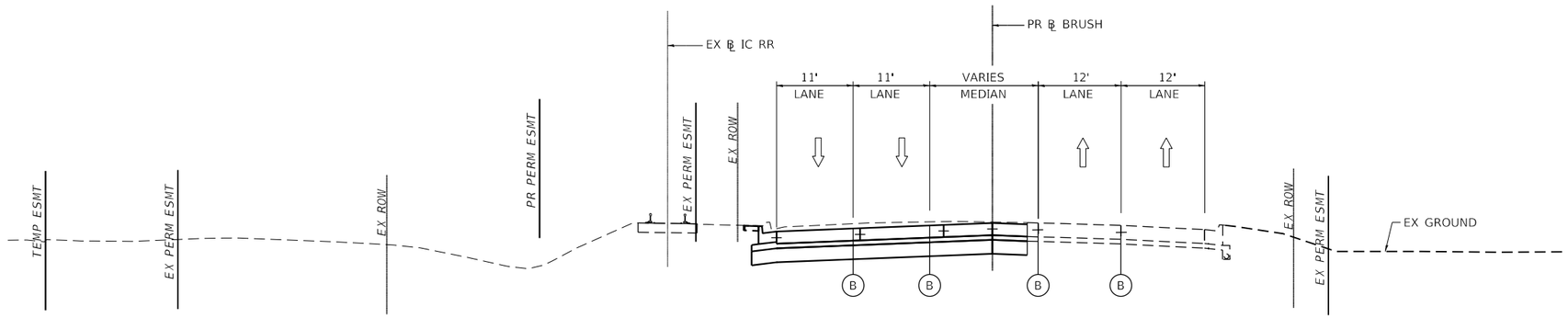

STAGE 2 - BRUSH COLLEGE ROAD

LOOKING NORTH

PR ℄ BRUSH STA 72+00 TO STA 75+00

LEGEND

- (A) EXISTING PAVEMENT MARKINGS
- (B) TEMPORARY PAVEMENT MARKINGS
- DIRECTIONAL ARROW
- TEMPORARY CONCRETE BARRIER
- DRUM OR BARRICADE TYPE II WITH STEADY BURN MONODIRECTIONAL LIGHT
- WORK ZONE
- TEMPORARY PAVEMENT
- PREVIOUSLY COMPLETED PAVEMENT

AECOM
345 EAST ASH AVENUE, SUITE B
DECATUR, IL 62526
PHONE: (217) 775-6065

USER NAME = maura.lakowski	DESIGNED - MA	REVISED -	
	DRAWN - MA	REVISED -	
PLOT SCALE = 20.0000 ' / in.	CHECKED - ML	REVISED -	
PLOT DATE = 11/5/2020	DATE - 10/30/2020	REVISED -	

STATE OF ILLINOIS
DEPARTMENT OF TRANSPORTATION

SUGGESTED STAGES OF CONSTRUCTION AND TRAFFIC CONTROL TYPICAL SECTIONS

SCALE: 1=10' | SHEET 17 OF SHEETS | STA. TO STA.

F.A.U. RTE.	SECTION	COUNTY	TOTAL SHEETS	SHEET NO.
7448	09-00933-01-BR	MACON	996	192

CONTRACT NO. XXXX(XXX)

ILLINOIS | FED. AID PROJECT

MODEL: Default
FILE NAME: pw:\\aecom-na-pw.bentley.com:AECOM_DS16_NA\Documents\60603202-Brush College\900-CAD GIS\910_CAD\03_SHEETS\01_AECOM\Typical Sections\New Typical Sections\MOT Typical Sections\60603202_MOT_TypSec_Stage_2_17_BCR_03.dgn

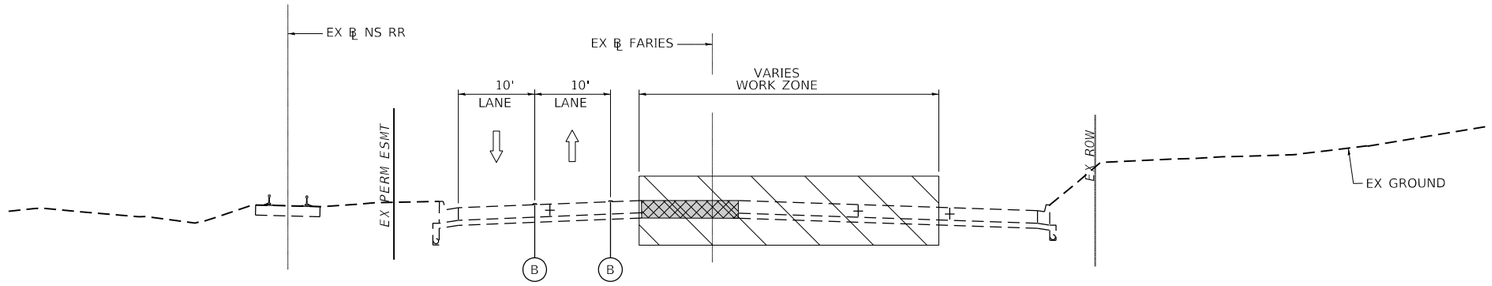

STAGE 3A & 3B - FARIES PARKWAY

LOOKING EAST
PR ℄ FARIES STA 205+00 TO STA 211+00

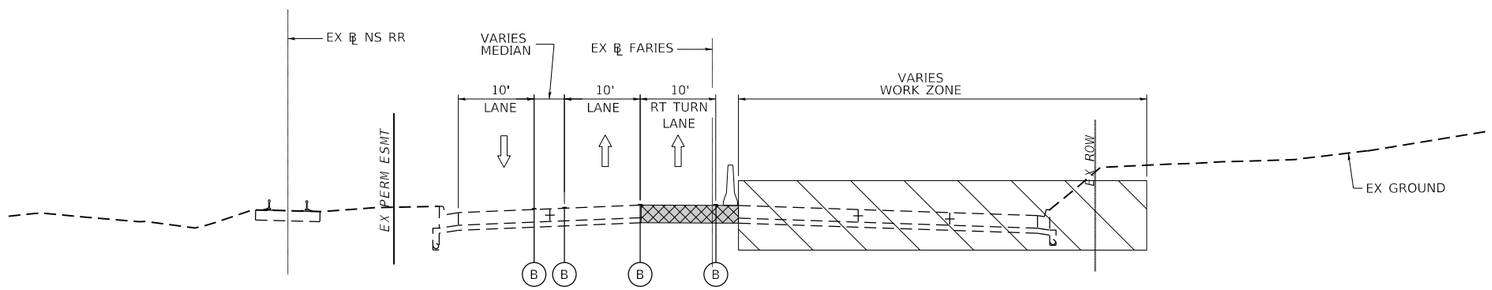

STAGE 3A & 3B - FARIES PARKWAY

LOOKING EAST
PR ℄ FARIES STA 211+00 TO STA 214+24

LEGEND

- (A) EXISTING PAVEMENT MARKINGS
- (B) TEMPORARY PAVEMENT MARKINGS
- DIRECTIONAL ARROW
- TEMPORARY CONCRETE BARRIER
- DRUM OR BARRICADE TYPE II WITH STEADY BURN MONODIRECTIONAL LIGHT
- WORK ZONE
- TEMPORARY PAVEMENT
- PREVIOUSLY COMPLETED PAVEMENT

AECOM
345 EAST ASH AVENUE, SUITE B
DECATUR, IL 62526
PHONE: (217) 775-6065

USER NAME = maura.lakowski	DESIGNED - MA	REVISED -	
	DRAWN - MA	REVISED -	
PLOT SCALE = 20.0000 ' / in.	CHECKED - ML	REVISED -	
PLOT DATE = 11/5/2020	DATE - 10/30/2020	REVISED -	

STATE OF ILLINOIS
DEPARTMENT OF TRANSPORTATION

SUGGESTED STAGES OF CONSTRUCTION AND TRAFFIC CONTROL TYPICAL SECTIONS

SCALE: 1=10' | SHEET 18 OF SHEETS | STA. TO STA.

F.A.U. RTE.	SECTION	COUNTY	TOTAL SHEETS	SHEET NO.
7448	09-00933-01-BR	MACON	996	193
		CONTRACT NO. XXXX(XXX)		
	ILLINOIS	FED. AID PROJECT		

MODEL: Default
FILE NAME: pw:\\aecom=na=pw.bentley.com:AECOM_DS16_NA\Documents\60603202-Brush College900-CAD GIS\910_CAD\03_SHEETS\01_AECOM\Typical Sections\New Typical Sections\MOT Typical Sections\60603202_MOT_TypSec_Stage_3_18_Faries_01.dgn

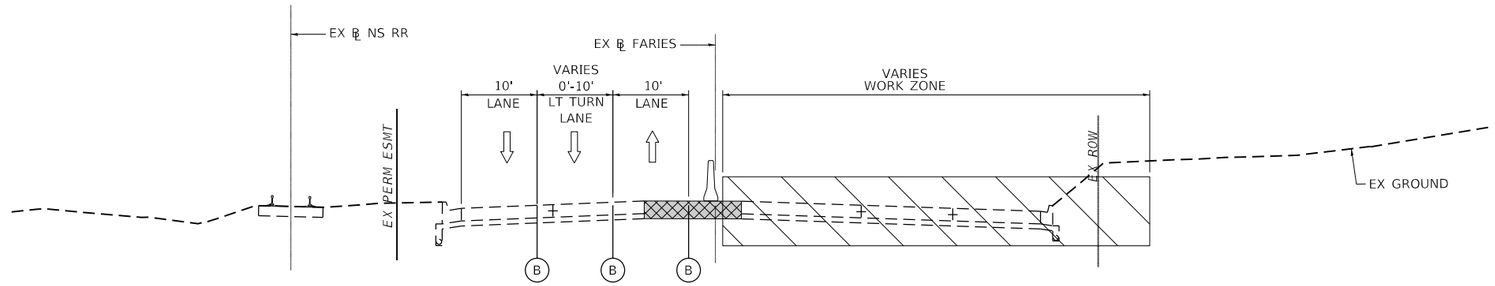

STAGE 3A & 3B - FARIES PARKWAY

LOOKING EAST
PR ℄ FARIES STA 215+44 TO STA 235+53

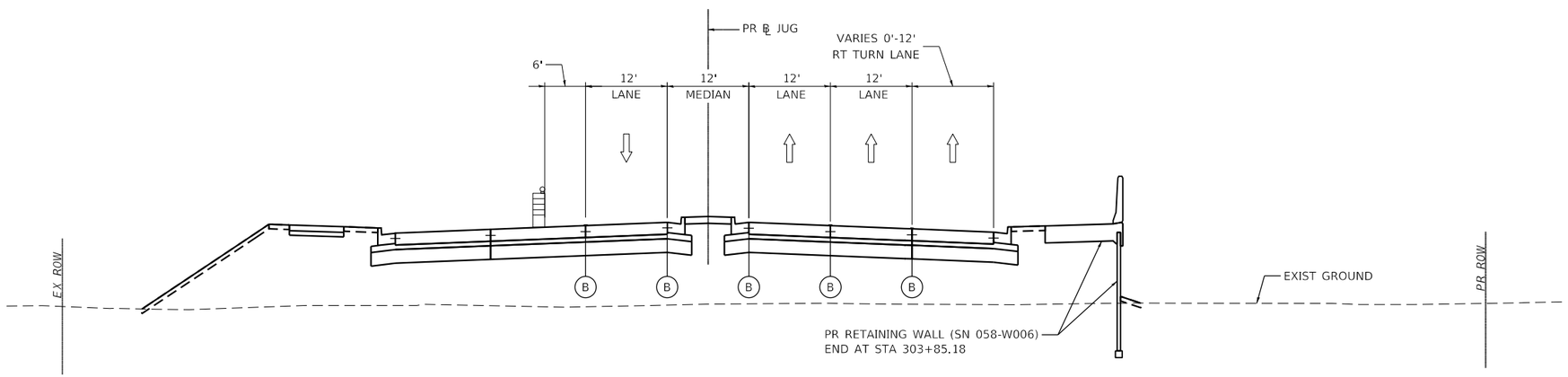

STAGE 3A & 3B - JUG HANDLE CONNECTOR ROAD

LOOKING EAST
PR ℄ JUG STA 300+76 TO STA 307+36

LEGEND

- (A) EXISTING PAVEMENT MARKINGS
- (B) TEMPORARY PAVEMENT MARKINGS
- DIRECTIONAL ARROW
- TEMPORARY CONCRETE BARRIER
- DRUM OR BARRICADE TYPE II WITH STEADY BURN MONODIRECTIONAL LIGHT
- WORK ZONE
- TEMPORARY PAVEMENT
- PREVIOUSLY COMPLETED PAVEMENT

AECOM
345 EAST ASH AVENUE, SUITE B
DECATUR, IL 62526
PHONE: (217) 775-6065

USER NAME = maura.lakowski	DESIGNED - MA	REVISED -
	DRAWN - MA	REVISED -
PLOT SCALE = 20.0000 ' / in.	CHECKED - ML	REVISED -
PLOT DATE = 11/5/2020	DATE - 10/30/2020	REVISED -

STATE OF ILLINOIS
DEPARTMENT OF TRANSPORTATION

SUGGESTED STAGES OF CONSTRUCTION AND TRAFFIC CONTROL TYPICAL SECTIONS

SCALE: 1=10' | SHEET 19 OF SHEETS | STA. TO STA.

F.A.U. RTE.	SECTION	COUNTY	TOTAL SHEETS	SHEET NO.
7448	09-00933-01-BR	MACON	996	194
		CONTRACT NO. XXXX(XXX)		
		ILLINOIS	FED. AID PROJECT	

MODEL: Default
FILE NAME: pw:\\aecom-na-pw.bentley.com:AECOM_DS16_NA\Documents\60603202-Brush College\900-CAD GIS\910_CAD\03_SHEETS\01_AECOM\Typical Sections\New Typical Sections\MOT Typical Sections\60603202_MOT_TypSec_Stage_3_19_Faries_02.dgn

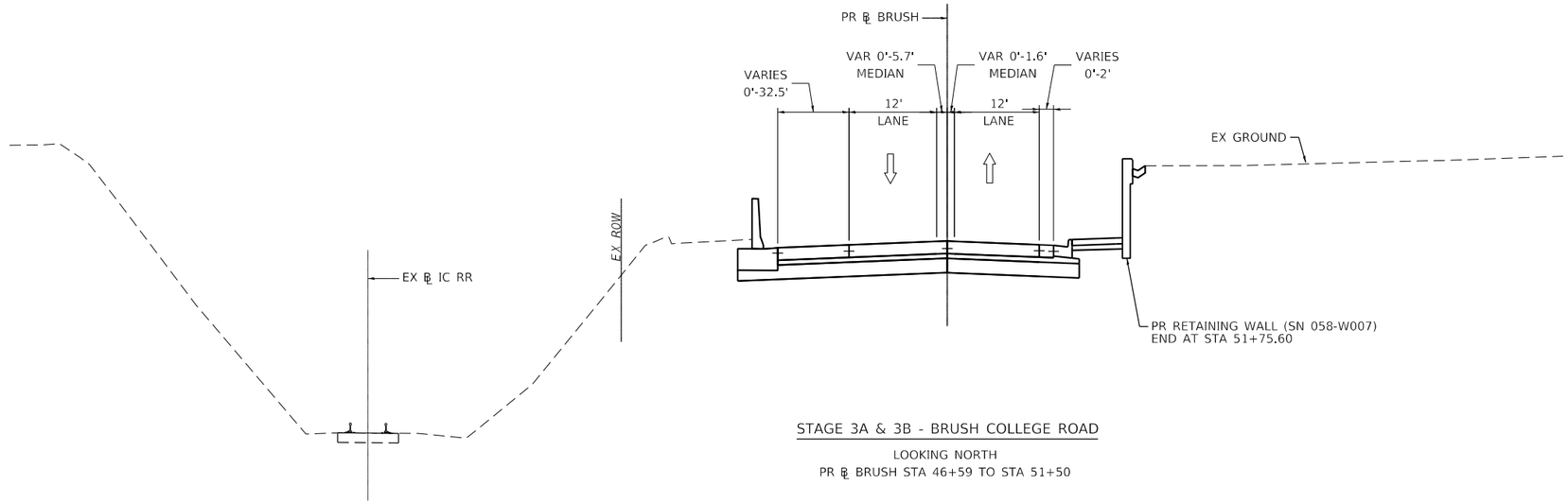

STAGE 3A & 3B - BRUSH COLLEGE ROAD

LOOKING NORTH

PR ℄ BRUSH STA 46+59 TO STA 51+50

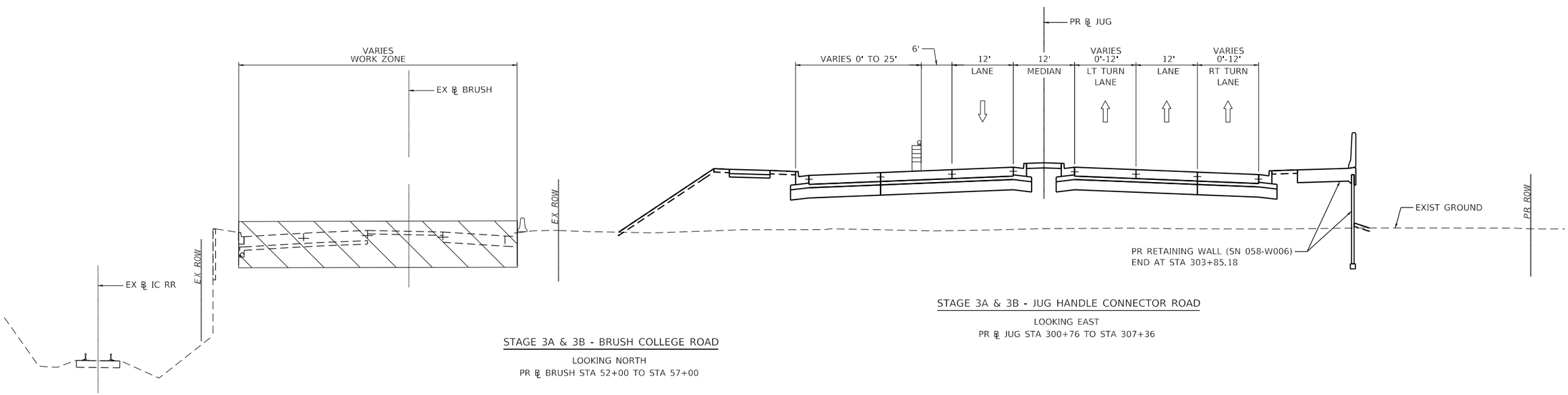

STAGE 3A & 3B - BRUSH COLLEGE ROAD

LOOKING NORTH

PR ℄ BRUSH STA 52+00 TO STA 57+00

STAGE 3A & 3B - JUG HANDLE CONNECTOR ROAD

LOOKING EAST

PR ℄ JUG STA 300+76 TO STA 307+36

LEGEND

- (A) EXISTING PAVEMENT MARKINGS
- (B) TEMPORARY PAVEMENT MARKINGS
- DIRECTIONAL ARROW
- TEMPORARY CONCRETE BARRIER
- DRUM OR BARRICADE TYPE II WITH STEADY BURN MONODIRECTIONAL LIGHT
- WORK ZONE
- TEMPORARY PAVEMENT
- PREVIOUSLY COMPLETED PAVEMENT

AECOM
345 EAST ASH AVENUE, SUITE B
DECATUR, IL 62526
PHONE: (217) 775-6065

USER NAME = maura.lakowski	DESIGNED - MA	REVISED -	
	DRAWN - MA	REVISED -	
PLOT SCALE = 20.0000 ' / in.	CHECKED - ML	REVISED -	
PLOT DATE = 11/5/2020	DATE - 10/30/2020	REVISED -	

STATE OF ILLINOIS
DEPARTMENT OF TRANSPORTATION

SUGGESTED STAGES OF CONSTRUCTION AND TRAFFIC CONTROL TYPICAL SECTIONS

SCALE: 1=10' | SHEET 21 OF SHEETS | STA. TO STA.

F.A.U. RTE.	SECTION	COUNTY	TOTAL SHEETS	SHEET NO.
7448	09-00933-01-BR	MACON	996	195

CONTRACT NO. XXXX(XXX)

ILLINOIS FED. AID PROJECT

MODEL: Default
FILE NAME: pw:\\aecom-nagow.bentley.com:AECOM_DS16_NA\Documents\60603202-Brush College\900-CAD GIS\910_CAD\03_SHEETS\01_AECOM\Typical Sections\New Typical Sections\MOT Typical Sections\60603202_MOT_TypSec_Stage_3_21_BCR_02.dgn

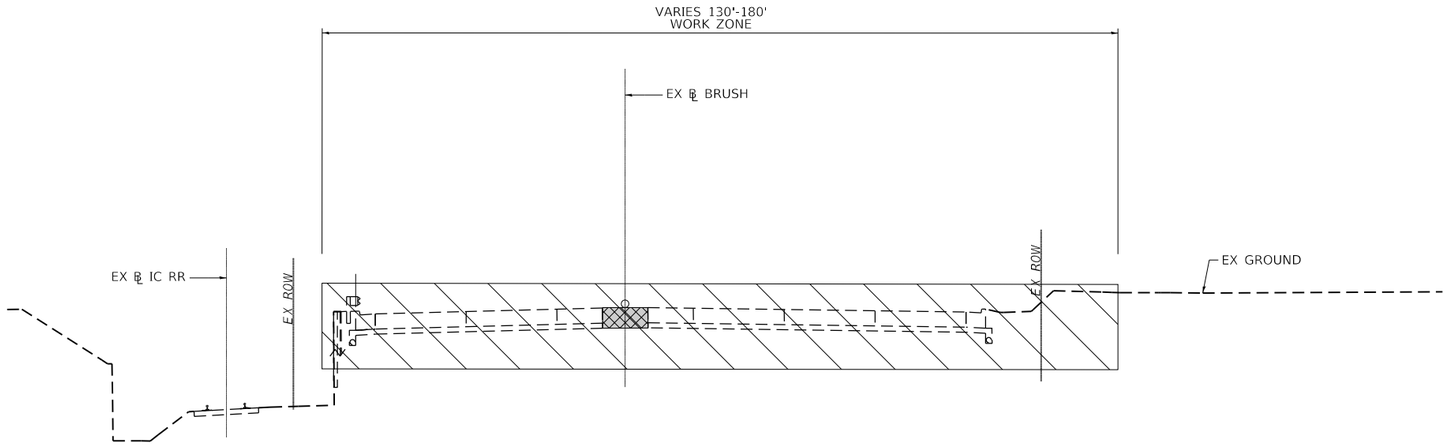

STAGE 3A & 3B - BRUSH COLLEGE ROAD

LOOKING NORTH

PR ℄ BRUSH STA 57+00 TO STA 59+12

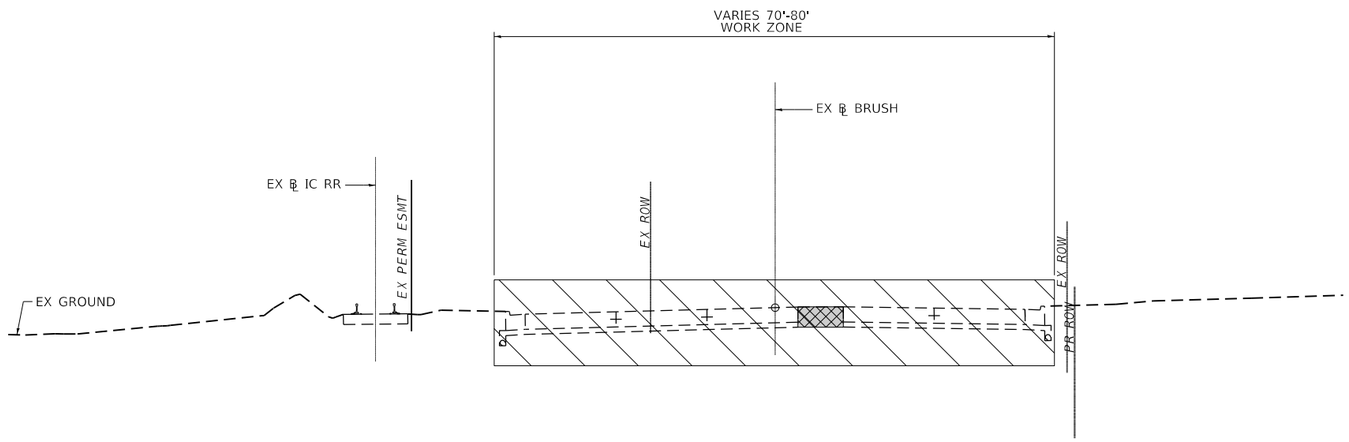

STAGE 3A & 3B - BRUSH COLLEGE ROAD

LOOKING NORTH

PR ℄ BRUSH STA 56+15 TO STA 65+84

LEGEND

- (A) EXISTING PAVEMENT MARKINGS
- (B) TEMPORARY PAVEMENT MARKINGS
- DIRECTIONAL ARROW
- TEMPORARY CONCRETE BARRIER
- DRUM OR BARRICADE TYPE II WITH STEADY BURN MONODIRECTIONAL LIGHT
- WORK ZONE
- TEMPORARY PAVEMENT
- PREVIOUSLY COMPLETED PAVEMENT

AECOM
345 EAST ASH AVENUE, SUITE B
DECATUR, IL 62526
PHONE: (217) 775-6065

USER NAME = maura.lakowski	DESIGNED - MA	REVISED -	
	DRAWN - MA	REVISED -	
PLOT SCALE = 20.0000 ' / in.	CHECKED - ML	REVISED -	
PLOT DATE = 11/5/2020	DATE - 10/30/2020	REVISED -	

STATE OF ILLINOIS
DEPARTMENT OF TRANSPORTATION

SUGGESTED STAGES OF CONSTRUCTION AND TRAFFIC CONTROL TYPICAL SECTIONS

SCALE: 1=10' | SHEET 22 OF SHEETS | STA. TO STA.

F.A.U. RTE.	SECTION	COUNTY	TOTAL SHEETS	SHEET NO.
7448	09-00933-01-BR	MACON	996	196

CONTRACT NO. XXXX(XXX)

ILLINOIS | FED. AID PROJECT

MODEL: Default
FILE NAME: pw:\\aecom-na-pw.bentley.com:AECOM_DS16_NA\Documents\60603202-Brush College\900-CAD GIS\910_CAD\03_SHEETS\01_AECOM\Typical Sections\New Typical Sections\MOT Typical Sections\60603202_MOT_TypSec_Stage_3_22_BCR_03.dgn

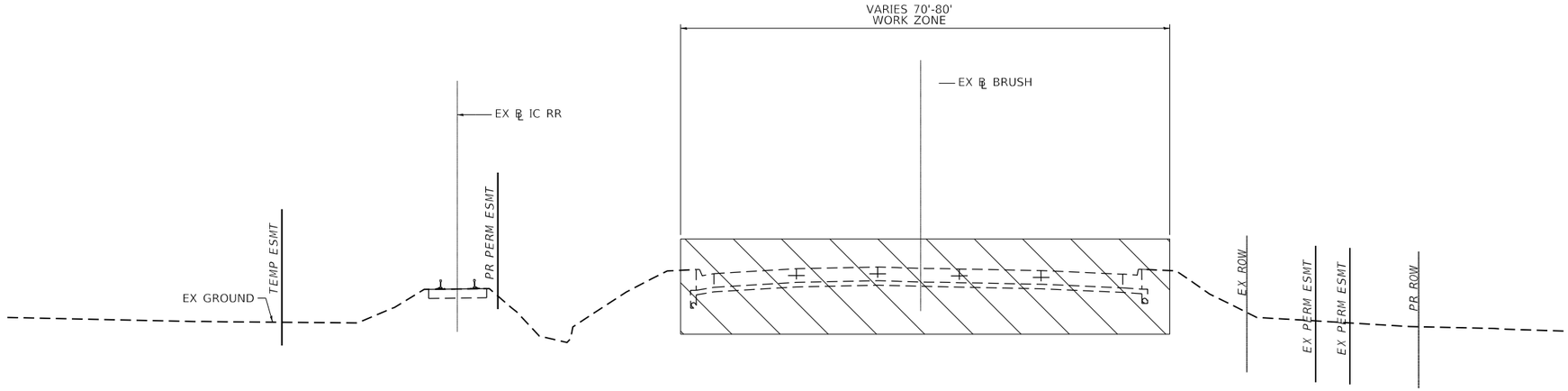

STAGE 3A & 3B - BRUSH COLLEGE ROAD

LOOKING NORTH

PR ℄ BRUSH STA 64+70 TO STA 69+04

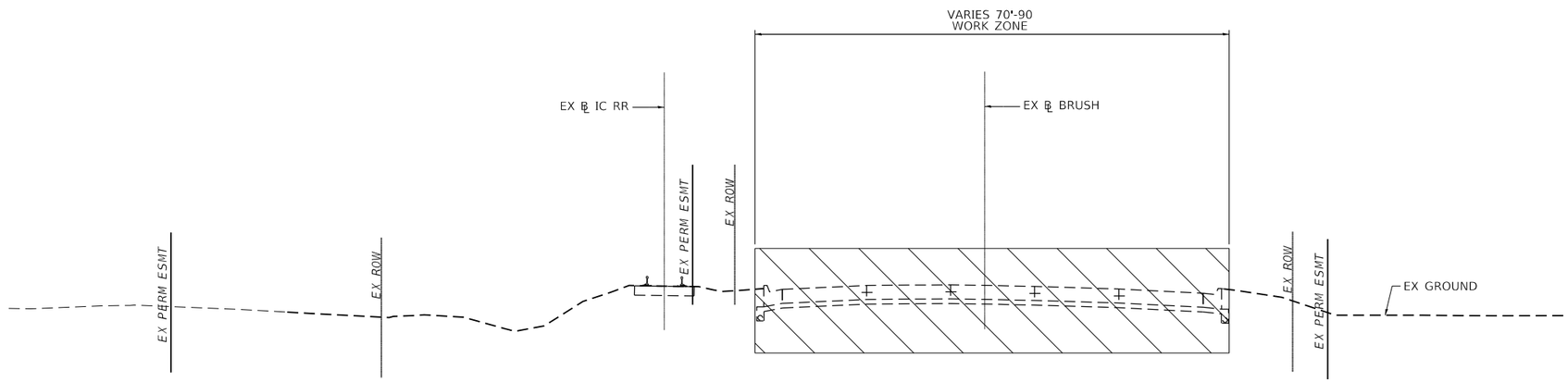

STAGE 3A & 3B - BRUSH COLLEGE ROAD

LOOKING NORTH

PR ℄ BRUSH STA 69+04 TO STA 72+40

LEGEND

- (A) EXISTING PAVEMENT MARKINGS
- (B) TEMPORARY PAVEMENT MARKINGS
- DIRECTIONAL ARROW
- TEMPORARY CONCRETE BARRIER
- DRUM OR BARRICADE TYPE II WITH STEADY BURN MONODIRECTIONAL LIGHT
- WORK ZONE
- TEMPORARY PAVEMENT
- PREVIOUSLY COMPLETED PAVEMENT

AECOM
345 EAST ASH AVENUE, SUITE B
DECATUR, IL 62526
PHONE: (217) 775-6065

USER NAME = maura.lakowski	DESIGNED - MA	REVISED -
	DRAWN - MA	REVISED -
PLOT SCALE = 20.0000 ' / in.	CHECKED - ML	REVISED -
PLOT DATE = 11/5/2020	DATE - 10/30/2020	REVISED -

STATE OF ILLINOIS
DEPARTMENT OF TRANSPORTATION

SUGGESTED STAGES OF CONSTRUCTION AND TRAFFIC CONTROL TYPICAL SECTIONS

SCALE: 1=10' | SHEET 23 OF SHEETS | STA. TO STA.

F.A.U. RTE.	SECTION	COUNTY	TOTAL SHEETS	SHEET NO.
7448	09-00933-01-BR	MACON	996	197

CONTRACT NO. XXXX(XXX)

ILLINOIS | FED. AID PROJECT

MODEL: Default
FILE NAME: pw:\\aecom-nagow.bentley.com:AECOM_DS16_NA\Documents\60603202-Brush College\900-CAD GIS\910_CAD\03_SHEETS\01_AECOM\Typical Sections\New Typical Sections\MOT Typical Sections\60603202_MOT_TypSec_Stage_3_23_BCR_04.dgn

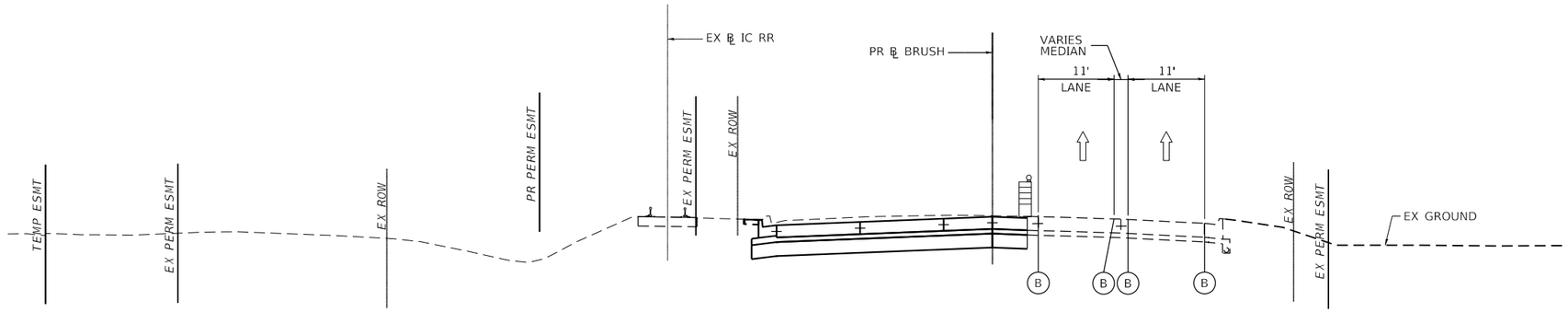

STAGE 3A & 3B - BRUSH COLLEGE ROAD

LOOKING NORTH

PR ℄ BRUSH STA 72+40 TO STA 75+00

LEGEND

- (A) EXISTING PAVEMENT MARKINGS
- (B) TEMPORARY PAVEMENT MARKINGS
- DIRECTIONAL ARROW
- TEMPORARY CONCRETE BARRIER
- DRUM OR BARRICADE TYPE II WITH STEADY BURN MONODIRECTIONAL LIGHT
- WORK ZONE
- TEMPORARY PAVEMENT
- PREVIOUSLY COMPLETED PAVEMENT

AECOM
345 EAST ASH AVENUE, SUITE B
DECATUR, IL 62526
PHONE: (217) 775-6065

USER NAME = maura.lakowski	DESIGNED - MA	REVISED -	
	DRAWN - MA	REVISED -	
PLOT SCALE = 20.0000 ' / in.	CHECKED - ML	REVISED -	
PLOT DATE = 11/5/2020	DATE - 10/30/2020	REVISED -	

STATE OF ILLINOIS
DEPARTMENT OF TRANSPORTATION

SUGGESTED STAGES OF CONSTRUCTION AND TRAFFIC CONTROL TYPICAL SECTIONS

SCALE: 1=10' | SHEET 24 OF SHEETS | STA. TO STA.

F.A.U. RTE.	SECTION	COUNTY	TOTAL SHEETS	SHEET NO.
7448	09-00933-01-BR	MACON	996	198

CONTRACT NO. XXXX(XXX)

ILLINOIS FED. AID PROJECT

MODEL: Default
FILE NAME: pw:\\aecom-na-pw.bentley.com:AECOM_DS16_NA\Documents\60603202-Brush College\900-CAD GIS\910_CAD\03_SHEETS\01_AECOM\Typical Sections\New Typical Sections\MOT Typical Sections\60603202_MOT_TypSec_Stage_3_24_BCR_05.dgn

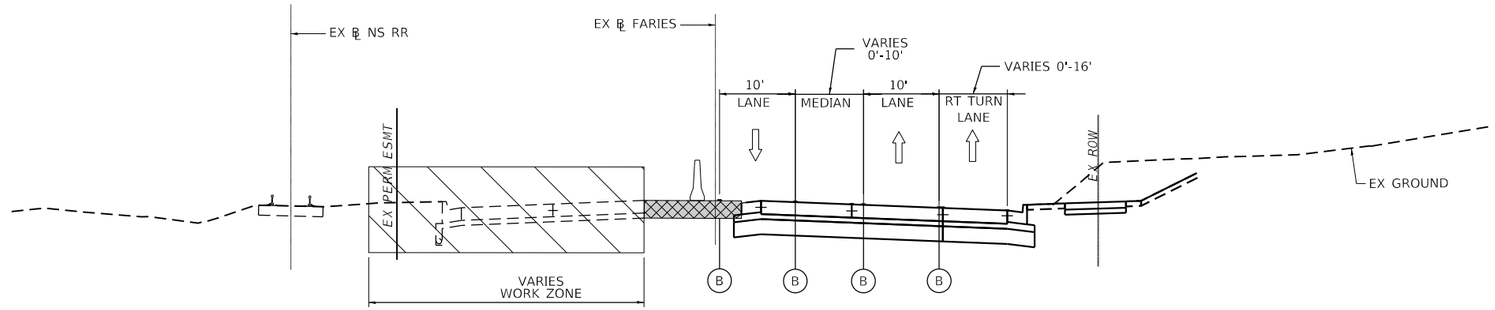

STAGE 4A FARIES PARKWAY

LOOKING EAST

PR ℄ FARIES STA 205+00.00 TO STA 214+00.00

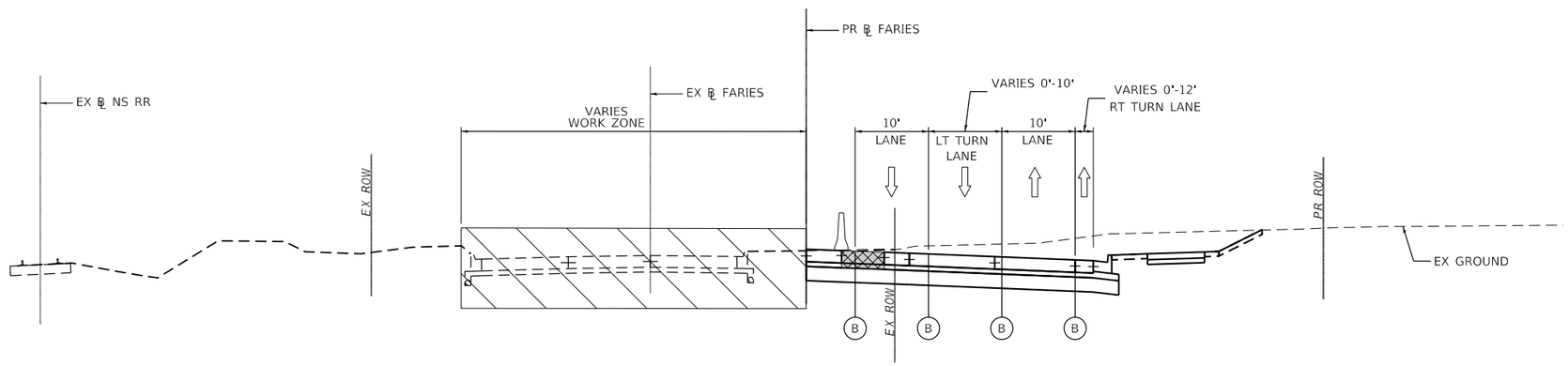

STAGE 4A PROPOSED FARIES PARKWAY

LOOKING EAST

PR ℄ FARIES STA 215+48.38 TO STA 224+20.94

LEGEND

- (A) EXISTING PAVEMENT MARKINGS
- (B) TEMPORARY PAVEMENT MARKINGS
- DIRECTIONAL ARROW
- TEMPORARY CONCRETE BARRIER
- DRUM OR BARRICADE TYPE II WITH STEADY BURN MONODIRECTIONAL LIGHT
- WORK ZONE
- TEMPORARY PAVEMENT
- PREVIOUSLY COMPLETED PAVEMENT

MODEL: Default
FILE NAME: pw:\\aecom-na-pw.bentley.com:AECOM_DS16_NA\Documents\60603202-Brush College\900-CAD GIS\910_CAD\03_SHEETS\01_AECOM\Typical Sections\New Typical Sections\MOT Typical Sections\60603202_MOT_TypSec_Stage_4_25_Faries_01.dgn

AECOM
345 EAST ASH AVENUE, SUITE B
DECATUR, IL 62526
PHONE: (217) 775-6065

USER NAME = maura.lakowski	DESIGNED - MA	REVISED -	
	DRAWN - MA	REVISED -	
PLOT SCALE = 20.0000 ' / in.	CHECKED - ML	REVISED -	
PLOT DATE = 11/5/2020	DATE - 10/30/2020	REVISED -	

STATE OF ILLINOIS
DEPARTMENT OF TRANSPORTATION

SUGGESTED STAGES OF CONSTRUCTION AND TRAFFIC CONTROL TYPICAL SECTIONS

SCALE: 1=10' | SHEET 25 OF SHEETS | STA. TO STA.

F.A.U. RTE.	SECTION	COUNTY	TOTAL SHEETS	SHEET NO.
7448	09-00933-01-BR	MACON	996	199

CONTRACT NO. XXXX(XXX)

ILLINOIS | FED. AID PROJECT

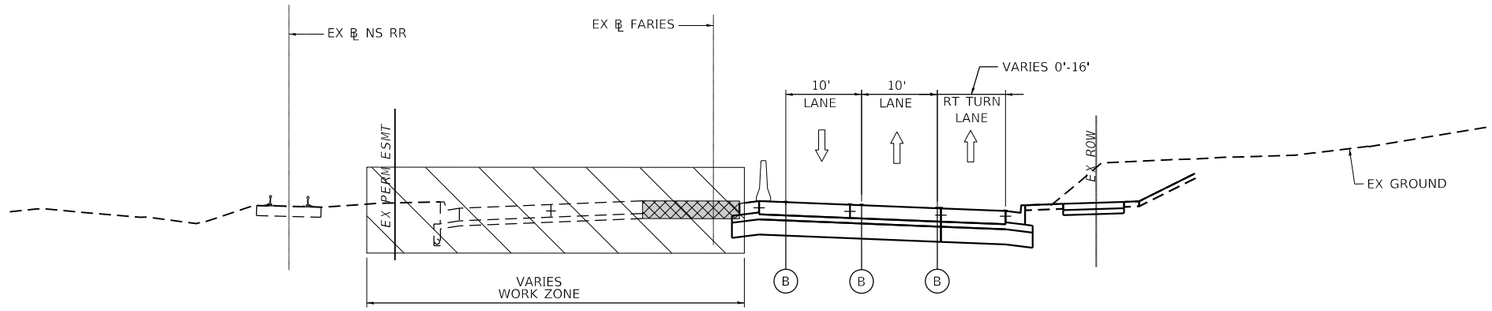

STAGE 4B FARIES PARKWAY

LOOKING EAST
PR ℄ FARIES STA 205+00.00 TO STA 214+00.00

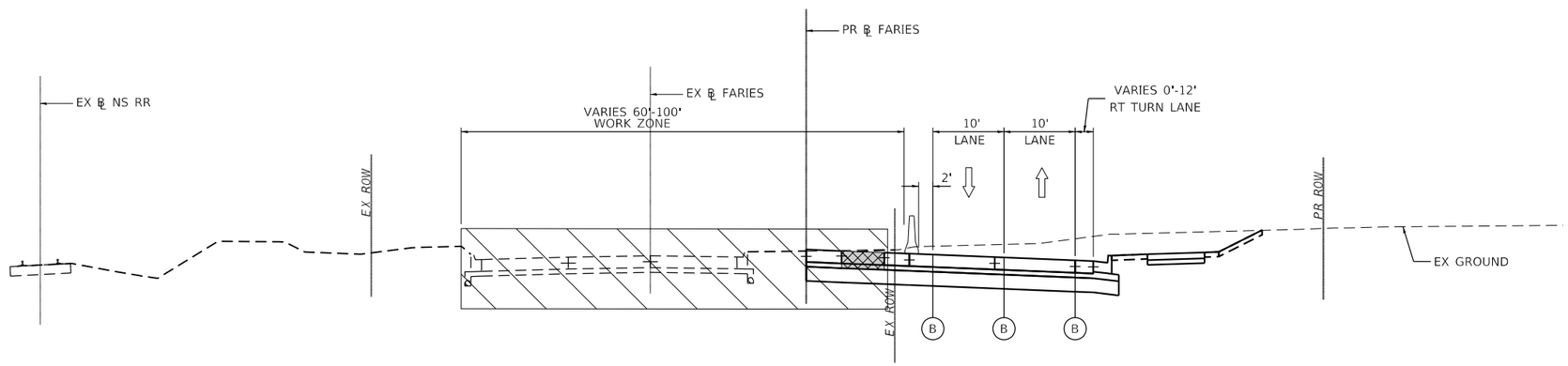

STAGE 4B PROPOSED FARIES PARKWAY

LOOKING EAST
PR ℄ FARIES STA 215+48.38 TO STA 224+20.94

LEGEND

- (A) EXISTING PAVEMENT MARKINGS
- (B) TEMPORARY PAVEMENT MARKINGS
- DIRECTIONAL ARROW
- TEMPORARY CONCRETE BARRIER
- DRUM OR BARRICADE TYPE II WITH STEADY BURN MONODIRECTIONAL LIGHT
- WORK ZONE
- TEMPORARY PAVEMENT
- PREVIOUSLY COMPLETED PAVEMENT

AECOM
345 EAST ASH AVENUE, SUITE B
DECATUR, IL 62526
PHONE: (217) 775-6065

USER NAME = maura.lakowski	DESIGNED - MA	REVISED -	
	DRAWN - MA	REVISED -	
PLOT SCALE = 20.0000 ' / in.	CHECKED - ML	REVISED -	
PLOT DATE = 11/5/2020	DATE - 10/30/2020	REVISED -	

STATE OF ILLINOIS
DEPARTMENT OF TRANSPORTATION

SUGGESTED STAGES OF CONSTRUCTION AND TRAFFIC CONTROL TYPICAL SECTIONS

SCALE: 1=10' | SHEET 26 OF SHEETS | STA. TO STA.

F.A.U. RTE.	SECTION	COUNTY	TOTAL SHEETS	SHEET NO.
7448	09-00933-01-BR	MACON	996	200

CONTRACT NO. XXXX(XXX)

ILLINOIS | FED. AID PROJECT

MODEL: Default
FILE NAME: pw:\\aecom-nagow.bentley.com:AECOM_DS16_NA\Documents\60603202-Brush College\900-CAD GIS\910_CAD\03_SHEETS\01_AECOM\Typical Sections\New Typical Sections\MOT Typical Sections\60603202_MOT_TypSec_Stage_4_26_Faries_02.dgn