PRELIMINARY PLAT

FOR

SOUTHEAST PLACE

DECATUR, ILLINOIS

DEVELOPER
AIRPORT PLAZA JOINT VENTURE, LLC
FORSYTH PROFESSIONAL CENTRE,
SUITE 265 241 WEST WEAVER ROAD
FORSYTH, ILLINOIS 62535

LEGAL DESCRIPTION

A RESUBDIVISION OF LOTS 2 AND 3 OF SOUTHEAST PLAZA FOURTH ADDITION

N

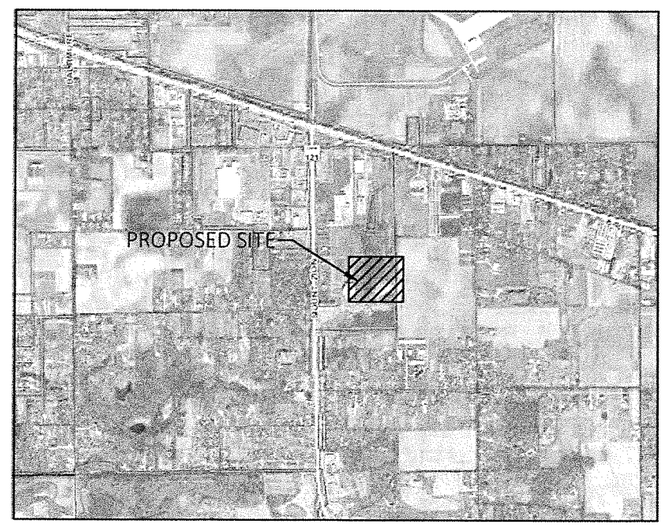

CONSTRUCTION SITE
LOCATION MAP

SHEET INDEX

C-1	COVER
C-2	PRELIMINARY PLAT
C-3	GENERAL NOTES
C-4	SWPP PLAN AND EXISTING CONTOURS
C-5	TYPICAL CROSS SECTION
C-6	PLAN AND PROFILE
C-7	PLAN AND PROFILE
C-8	PLAN AND PROFILE
C-9	DRAINAGE PLAN
C-10	SIDEWALK DETAILS
C-11	DETAILS
C-12	DETAILS
C-13	DETAILS
C-14	DETAILS

UTILITY/PROJECT CONTACTS

AMEREN (GAS & ELECTRIC)
2460 N. JASPER ST.
DECATUR, IL 62526
CONTACT: SHAWN SPILLMAN
PHONE: (217) 424-8745

FRONTIER (PHONE)
112 S MAIN ST
SULLIVAN, IL 61951
CONTACT: DAVE LOVE
PHONE: (217) 892-3330

COMCAST (CABLE)
1275 N. WATER ST.
DECATUR, IL 62521
CONTACT: KEITH KOSHINSKI
PHONE: (224) 229-3253

CITY OF DECATUR (WATER, SANITARY, AND STORM)
#1 GARY ANDERSON PLAZA
DECATUR, IL 62521
CONTACT: MATT NEWELL
PHONE: (217) 424-2747

CHASTAIN & ASSOC. (PROJECT MANAGER)
5 N. COUNTRY CLUB RD.
DECATUR, IL 62521
CONTACT: MARY CAVE
PHONE: (217) 422-8544

CHASTAIN & ASSOC. (SURVEYOR)
5 N. COUNTRY CLUB RD.
DECATUR, IL 62521
CONTACT: RANDY TREI
PHONE: (217) 422-8544

LONG CREEK TOWNSHIP (WATER)
2610 SALEM SCHOOL ROAD
DECATUR, IL 62521
CONTACT: WAYNE DOTSON
PHONE: (217) 864-4182

MARY E. CAVE
DATE 11-23-2018
ILLINOIS REGISTERED PROFESSIONAL ENGINEER
No. 062-060331

STATE OF ILLINOIS
MARY E. CAVE
062-060331
PROFESSIONAL ENGINEER
EXP. 11/30/19

BY	DATE	REVISION/ISSUED
LPR	11/27/2018	PRELIMINARY PLAT RESUBMITTAL

PROJECT NO. 6615
FIELD BOOK NO. XXX
START DATE AUGUST 2017
DRAWN BY CR
CHECKED BY MEC
FB NO. 1599, 6136
PROJECT NO. XXXX-XXXX
FILE LOCATION N:\

CHASTAIN & ASSOCIATES LLC
CONSULTING ENGINEERS
DECATUR (217) 422-8544
SCHAUMBURG (773) 714-0050
ROCKFORD (815) 489-0050
184-001397

STATE OF ILLINOIS
MARY E. CAVE
062-060331
PROFESSIONAL ENGINEER
EXP. 11/30/19

COVER
SOUTHEAST PLACE
FITZGERALD RD. & IL RT. 121
DECATUR, IL

sheet no. C-1

project no. 6615

SOUTHEAST PLACE

A RESUBDIVISION OF LOTS 2 AND 3 OF SOUTHEAST PLAZA FOURTH ADDITION
OWNER-DEVELOPER
AIRPORT PLAZA JOINT VENTURE,LLC
ROY B. MOSSER,JR.,MEMBER

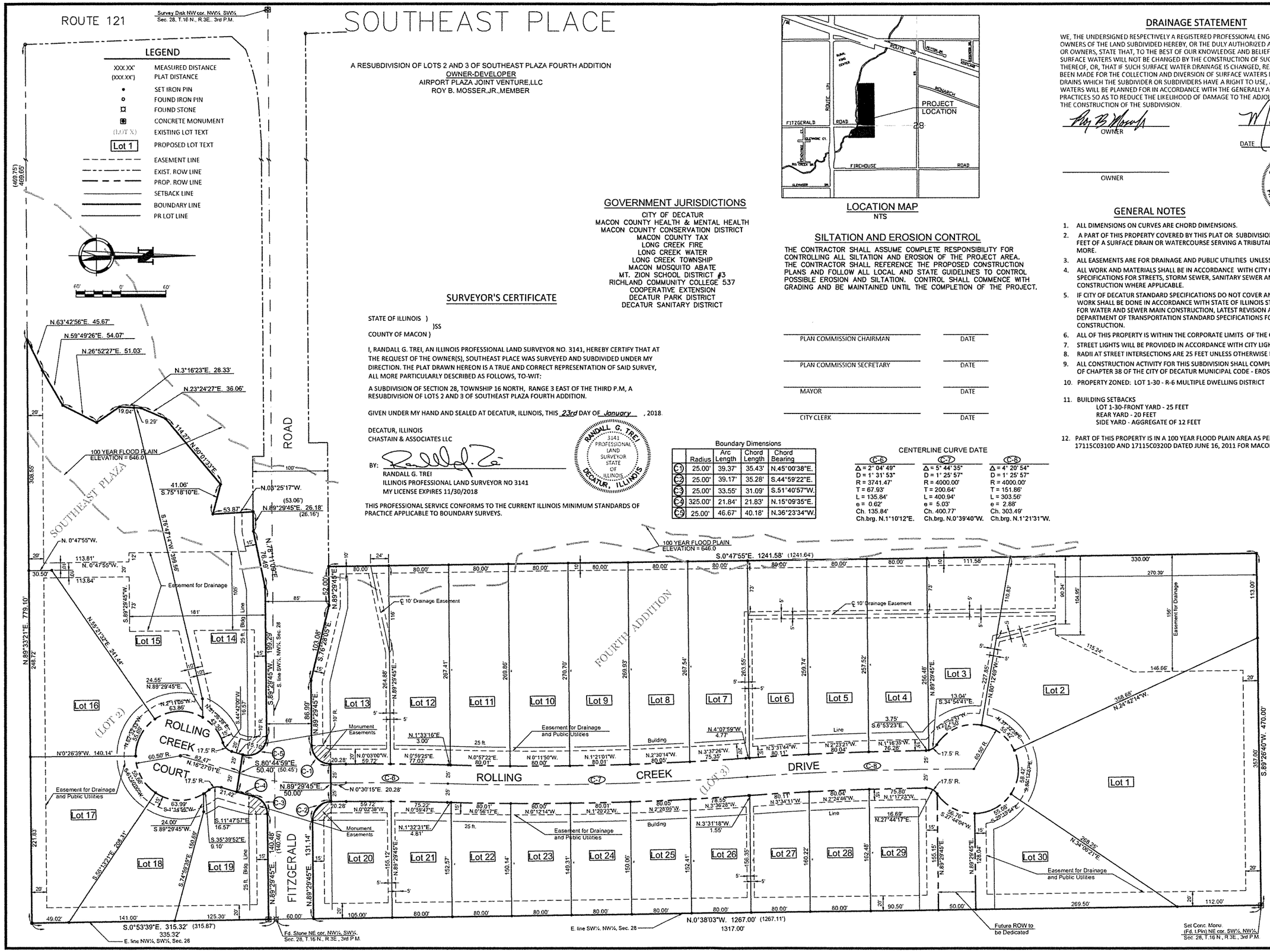

GOVERNMENT JURISDICTIONS

CITY OF DECATUR
MACON COUNTY HEALTH & MENTAL HEALTH
MACON COUNTY CONSERVATION DISTRICT
MACON COUNTY TAX
LONG CREEK FIRE
LONG CREEK WATER
LONG CREEK TOWNSHIP
MACON MOSQUITO ABATE
MT. ZION SCHOOL DISTRICT #3
RICHLAND COMMUNITY COLLEGE 537
COOPERATIVE EXTENSION
DECATUR PARK DISTRICT
DECATUR SANITARY DISTRICT

SURVEYOR'S CERTIFICATE

STATE OF ILLINOIS)
)SS
COUNTY OF MACON)

I, RANDALL G. TREI, AN ILLINOIS PROFESSIONAL LAND SURVEYOR NO. 3141, HEREBY CERTIFY THAT AT THE REQUEST OF THE OWNER(S), SOUTHEAST PLACE WAS SURVEYED AND SUBDIVIDED UNDER MY DIRECTION. THE PLAT DRAWN HEREON IS A TRUE AND CORRECT REPRESENTATION OF SAID SURVEY, ALL MORE PARTICULARLY DESCRIBED AS FOLLOWS, TO-WIT:

A SUBDIVISION OF SECTION 28, TOWNSHIP 16 NORTH, RANGE 3 EAST OF THE THIRD P.M, A RESUBDIVISION OF LOTS 2 AND 3 OF SOUTHEAST PLAZA FOURTH ADDITION.

GIVEN UNDER MY HAND AND SEALED AT DECATUR, ILLINOIS, THIS 23rd DAY OF January , 2018.

DECATUR, ILLINOIS
CHASTAIN & ASSOCIATES LLC

BY: _____
RANDALL G. TREI
ILLINOIS PROFESSIONAL LAND SURVEYOR NO 3141
MY LICENSE EXPIRES 11/30/2018

THIS PROFESSIONAL SERVICE CONFORMS TO THE CURRENT ILLINOIS MINIMUM STANDARDS OF PRACTICE APPLICABLE TO BOUNDARY SURVEYS.

RANDALL G. TREI
3141
PROFESSIONAL LAND SURVEYOR
STATE OF ILLINOIS
DECATUR, ILLINOIS

Boundary Dimensions

	Radius	Arc Length	Chord Length	Chord Bearing
C-1	25.00'	39.37'	35.43'	N.45°00'38"E.
C-2	25.00'	39.17'	35.28'	S.44°59'22"E.
C-3	25.00'	33.55'	31.09'	S.51°40'57"W.
C-4	325.00'	21.84'	21.83'	N.15°09'35"E.
C-5	25.00'	46.67'	40.18'	N.36°23'34"W.

CENTERLINE CURVE DATE

C-6	C-7	C-8
Δ = 2° 04' 49"	Δ = 5° 44' 35"	Δ = 4° 20' 54"
D = 1° 31' 53"	D = 1° 25' 57"	D = 1° 25' 57"
R = 3741.47'	R = 4000.00'	R = 4000.00'
T = 67.93'	T = 200.64'	T = 151.86'
L = 135.84'	L = 400.94'	L = 303.56'
e = 0.62'	e = 5.03'	e = 2.88'
Ch. 135.84'	Ch. 400.77'	Ch. 303.49'
Ch.brg. N.1°10'12"E.	Ch.brg. N.0°39'40"W.	Ch.brg. N.1°21'31"W.

LOCATION MAP
NTS

SILTATION AND EROSION CONTROL

THE CONTRACTOR SHALL ASSUME COMPLETE RESPONSIBILITY FOR CONTROLLING ALL SILTATION AND EROSION OF THE PROJECT AREA. THE CONTRACTOR SHALL REFERENCE THE PROPOSED CONSTRUCTION PLANS AND FOLLOW ALL LOCAL AND STATE GUIDELINES TO CONTROL POSSIBLE EROSION AND SILTATION. CONTROL SHALL COMMENCE WITH GRADING AND BE MAINTAINED UNTIL THE COMPLETION OF THE PROJECT.

PLAN COMMISSION CHAIRMAN _____ DATE _____

PLAN COMMISSION SECRETARY _____ DATE _____

MAYOR _____ DATE _____

CITY CLERK _____ DATE _____

DRAINAGE STATEMENT

WE, THE UNDERSIGNED RESPECTIVELY A REGISTERED PROFESSIONAL ENGINEER AND THE OWNER OR OWNERS OF THE LAND SUBDIVIDED HEREBY, OR THE DULY AUTHORIZED ATTORNEY OF SUCH OWNER OR OWNERS, STATE THAT, TO THE BEST OF OUR KNOWLEDGE AND BELIEF, THE DRAINAGE OF THE SURFACE WATERS WILL NOT BE CHANGED BY THE CONSTRUCTION OF SUCH SUBDIVISION OR ANY PART THEREOF, OR, THAT IF SUCH SURFACE WATER DRAINAGE IS CHANGED, REASONABLE PROVISION HAS BEEN MADE FOR THE COLLECTION AND DIVERSION OF SURFACE WATERS INTO PUBLIC AREAS, OR DRAINS WHICH THE SUBDIVIDER OR SUBDIVIDERS HAVE A RIGHT TO USE, AND THAT SUCH SURFACE WATERS WILL BE PLANNED FOR IN ACCORDANCE WITH THE GENERALLY ACCEPTED ENGINEERING PRACTICES SO AS TO REDUCE THE LIKELIHOOD OF DAMAGE TO THE ADJOINING PROPERTY BECAUSE OF THE CONSTRUCTION OF THE SUBDIVISION.

OWNER

MARY E. CAVE
DATE 1-23-2018

OWNER

STATE OF ILLINOIS
MARY E. CAVE
062-060331
PROFESSIONAL ENGINEER
EXP. 11/30/19

GENERAL NOTES

1. ALL DIMENSIONS ON CURVES ARE CHORD DIMENSIONS.
2. A PART OF THIS PROPERTY COVERED BY THIS PLAT OR SUBDIVISION IS SITUATED WITHIN 500 FEET OF A SURFACE DRAIN OR WATERCOURSE SERVING A TRIBUTARY AREA OF 640 ACRES OF MORE.
3. ALL EASEMENTS ARE FOR DRAINAGE AND PUBLIC UTILITIES UNLESS OTHERWISE STATED.
4. ALL WORK AND MATERIALS SHALL BE IN ACCORDANCE WITH CITY OF DECATUR STANDARD SPECIFICATIONS FOR STREETS, STORM SEWER, SANITARY SEWER AND WATERMAIN CONSTRUCTION WHERE APPLICABLE.
5. IF CITY OF DECATUR STANDARD SPECIFICATIONS DO NOT COVER ANY ITEMS OF WORK, ALL WORK SHALL BE DONE IN ACCORDANCE WITH STATE OF ILLINOIS STANDARD SPECIFICATIONS FOR WATER AND SEWER MAIN CONSTRUCTION, LATEST REVISION AND THE ILLINOIS DEPARTMENT OF TRANSPORTATION STANDARD SPECIFICATIONS FOR ROAD AND BRIDGE CONSTRUCTION.
6. ALL OF THIS PROPERTY IS WITHIN THE CORPORATE LIMITS OF THE CITY OF DECATUR.
7. STREET LIGHTS WILL BE PROVIDED IN ACCORDANCE WITH CITY LIGHTING REQUIREMENTS.
8. RADII AT STREET INTERSECTIONS ARE 25 FEET UNLESS OTHERWISE DESIGNATED.
9. ALL CONSTRUCTION ACTIVITY FOR THIS SUBDIVISION SHALL COMPLY WITH THE PROVISIONS OF CHAPTER 38 OF THE CITY OF DECATUR MUNICIPAL CODE - EROSION CONTROL
10. PROPERTY ZONED: LOT 1-30 - R-6 MULTIPLE DWELLING DISTRICT
11. BUILDING SETBACKS
    LOT 1-30-FRONT YARD - 25 FEET
    REAR YARD - 20 FEET
    SIDE YARD - AGGREGATE OF 12 FEET
12. PART OF THIS PROPERTY IS IN A 100 YEAR FLOOD PLAIN AREA AS PER FEMA REPORT 17115C0310D AND 17115C0320D DATED JUNE 16, 2011 FOR MACON COUNTY, ILLINOIS.

SITE DATA

LOT 1	1.76 AC.
LOT 2	1.53 AC.
LOT 3	0.48 AC.
LOT 4	0.47 AC.
LOT 5	0.47 AC.
LOT 6	0.48 AC.
LOT 7	0.49 AC.
LOT 8	0.49 AC.
LOT 9	0.50 AC.
LOT 10	0.50 AC.
LOT 11	0.49 AC.
LOT 12	0.49 AC.
LOT 13	0.57 AC.
LOT 14	0.95 AC.
LOT 15	1.38 AC.
LOT 16	0.62 AC.
LOT 17	0.59 AC.
LOT 18	0.40 AC.
LOT 19	0.40 AC.
LOT 20	0.37 AC.
LOT 21	0.28 AC.
LOT 22	0.28 AC.
LOT 23	0.27 AC.
LOT 24	0.27 AC.
LOT 25	0.28 AC.
LOT 26	0.28 AC.
LOT 27	0.29 AC.
LOT 28	0.30 AC.
LOT 29	0.34 AC.
LOT 30	0.54 AC.
TOTAL LOT AREA	16.58 AC.
PROP. ROW AREA	1.62 AC.
TOTAL AREA	18.20 AC.

BY	DATE	REVISION/ISSUED
CR	1/22/2018	PRELIM PLAT RESUBMITTAL

PROJECT NO.	6615
FIELD BOOK NO.	
START DATE	NOVEMBER 2017
DRAWN BY	LPJ
CHECKED BY	RGT
C&A REF. NO.	5899/6136
BGM REF. NO.	
FILE LOCATION	J:\ROVER\CHPROJ\MOSSER

CHASTAIN & ASSOCIATES LLC
CONSULTING ENGINEERS
DECATUR (217) 422-8544
SCHAUMBURG (773) 714-0050
ROCKFORD (815) 489-0050
184-001397

PRELIMINARY PLAT
SOUTHEAST PLACE
FITZGERALD RD & IL RT. 121
DECATUR, IL

sheet no. C-2

project no. 6615

GENERAL NOTES

1. THE ENGINEER SHALL NOT GUARANTEE THE WORK OF ANY CONTRACTOR, SHALL HAVE NO AUTHORITY TO STOP WORK, SHALL HAVE NO SUPERVISION OR CONTROL AS TO THE WORK OR PERSONS DOING THE WORK, SHALL NOT BE RESPONSIBLE FOR SAFETY IN, ON, OR ABOUT THE JOB SITE OR HAVE ANY CONTROL OF THE SAFETY OR ADEQUACY OF ANY EQUIPMENT, BUILDING COMPONENT, SCAFFOLDING, SUPPORTS, FORMS OR OTHER WORK AIDS, AND SHALL HAVE NO DUTIES OR RESPONSIBILITIES IMPOSED BY ACTS GOVERNING THE WORKPLACE.

2. THE ABBREVIATION SSRB SHALL REFER TO THE ILLINOIS STANDARD SPECIFICATIONS FOR ROAD AND BRIDGE CONSTRUCTION ADOPTED APRIL 1, 2016. COPIES AVAILABLE ONLINE AT http://www.idot.illinois.gov/Assets/uploads/files/ Doing-Business/ Manuals-Guides-&-Handbooks/Highways/Construction/ Standard-Specifications/12SpecBook.pdf

3. THE ABBREVIATION SSWSC SHALL REFER TO THE STANDARD SPECIFICATIONS FOR WATER AND SEWER CONSTRUCTION IN ILLINOIS, 7TH EDITION OR LATEST EDITION.

4. SSRB AND SSWSC ARTICLES DEALING WITH METHOD OF MEASUREMENT AND BASIS OF PAYMENT PORTIONS OF REFERENCED STANDARD SPECIFICATIONS SHALL NOT APPLY.

5. WORK SHALL CONFORM TO THE CITY OF DECATUR AND/OR IDOT CONSTRUCTION STANDARDS, THE ILLINOIS ACCESSIBILITY CODE, PROWAG AND STANDARD SPECIFICATIONS FOR WATER AND SEWER MAIN CONSTRUCTION IN ILLINOIS.

6. NOTHING CONTAINED HEREIN SHALL RELIEVE ANY CONTRACTOR OF HIS/HER DUTY TO OBSERVE AND COMPLY WITH ALL APPLICABLE LAWS, NOR SHALL THE ENGINEER BE RESPONSIBLE FOR THE CONTRACTOR'S COMPLIANCE OR NONCOMPLIANCE WITH SUCH LAWS.

7. THE TERMS "PLACE", "CONSTRUCT" AND "INSTALL" SHALL BE INTERPRETED TO MEAN, "FURNISH ALL EQUIPMENT, MATERIAL AND LABOR TO COMPLETE THIS WORK".

8. THE ENGINEER SHALL NOT BE RESPONSIBLE FOR CONTRACTOR'S DUTY TO OBSERVE AND COMPLY WITH CLIENT CONTRACT REQUIREMENTS, LOCAL AND STATE REGULATIONS, OR FOR THE CONTRACTOR'S FAILURE TO DO SO.

9. CONTRACTOR SHALL BE RESPONSIBLE FOR LOCATING AND PROTECTING UTILITIES DURING AND UNTIL COMPLETION OF THE PROJECT. UTILITIES SHOWN ON THE PLANS WERE LOCATED IN THE FIELD AND/OR LOCATED FROM ARCHIVAL DATA. THESE LOCATIONS ARE CONSIDERED APPROXIMATE. THE CONTRACTOR SHALL VERIFY THE EXACT LOCATIONS IN THE FIELD. (J.U.L.I.E. 1-800-892-0123)

10. CONTRACTOR SHALL REPAIR ANY DAMAGED UTILITY LINES CAUSED BY HIS/HER ACTIVITIES. ALL WORK REQUIRED TO PERMANENTLY REPAIR THE UTILITY TO THE ENGINEER'S SATISFACTION SHALL BE AT THE CONTRACTOR'S EXPENSE.

11. CONTRACTOR SHALL FIELD VERIFY THE EXISTING STORM AND SANITARY FLOWLINES AT THE PROPOSED CONNECTIONS PRIOR TO PERFORMING ANY SEWER WORK.

12. CONTRACTOR SHALL POTHOLE ALL LOCATIONS WHERE PROPOSED STORM AND/OR SANITARY SEWER ARE TO CROSS EXISTING UTILITIES TO VERIFY THERE WILL NOT BE CONFLICT. IF A CONFLICT IS FOUND THE CONTRACTOR SHALL CONTACT THE ENGINEER.

13. ALL ELEVATIONS ARE BASED ON NAVD 88 DATUM. THE PROPOSED GRADE ELEVATIONS SHOWN ON THE PLAN SHEETS ARE THE ELEVATIONS FOR THE FINISHED SURFACE AT THE INDICATED LOCATIONS.

14. CONTRACTOR IS RESPONSIBLE FOR OBTAINING ALL NECESSARY PERMITS AND/OR APPROVALS REQUIRED TO WORK WITHIN THE PUBLIC RIGHT-OF-WAY. ALL WORK CONDUCTED IN THE PUBLIC RIGHT-OF-WAY SHALL BE CONDUCTED BY A CONTRACTOR LICENSED AND BONDED BY THE CITY OF DECATUR.

15. CONTRACTOR SHALL PROVIDE EROSION CONTROL MEASURES TO MEET ALL REGULATORY REQUIREMENTS AND SWPPP WITHIN THIS PLAN SET. THIS SHALL INCLUDE BUT NOT LIMITED TO INLET PROTECTION, CONCRETE WASHOUT AND CONTROLLING TRACKOUT ON THE SURROUNDING STREETS.

16. AN ENVIRONMENTAL SURVEY WAS NOT PERFORMED AS PART OF THIS DESIGN.

17. ALL ENTRANCES / DRIVEWAYS ARE AT A 90 DEGREE ANGLE TO THE ADJACENT ROADWAY UNLESS OTHERWISE NOTED.

18. ALL TRENCHES WITHIN 2 FEET OF A PAVED SURFACE SHALL BE GRANULAR BACKFILLED, UNLESS IN A RIGHT OF WAY WHEN FLOWABLE FILL SHALL BE USED.

19. WHERE SECTION STONES OR PROPERTY MARKERS ARE ENCOUNTERED, THE ENGINEER SHALL BE NOTIFIED BEFORE SUCH STONES OR MARKERS ARE REMOVED. THE CONTRACTOR SHALL PROTECT AND PRESERVE ALL PROPERTY MARKERS ALONG THE OUTER BOUNDARY UNTIL AN AUTHORIZED SURVEYOR HAS WITNESSED OR REFERENCED THEIR LOCATION.

20. TRAFFIC CONTROL WILL BE THE RESPONSIBILITY OF THE CONTRACTOR AND/OR SUBCONTRACTORS AND SHALL BE IN ACCORDANCE WITH IDOT STANDARDS.

SPECIFICATIONS

EXCAVATION AND EMBANKMENT

THE CONTRACTOR SHALL GRADE THE SITE AS SHOWN IN THE PLANS. THIS WORK SHALL MEET THE REQUIREMENTS OF SECTION 202 AND SECTION 205 OF THE SSRB AND ALL OTHER REFERENCED ARTICLES AND SECTIONS. BACKFILLING AROUND PROPOSED IMPROVEMENTS SHALL BE CONSIDERED INCIDENTAL TO THE COST OF SAID IMPROVEMENT.

TRENCH BACKFILL

THE CONTRACTOR SHALL PLACE TRENCH BACKFILL AS SHOWN IN THE PLANS. THIS WORK SHALL MEET THE REQUIREMENTS OF SECTION 208 OF THE SSRB AND ALL OTHER REFERENCED ARTICLES AND SECTIONS.

SEEDING CLASS 1 AND MULCH METHOD 2

THE CONTRACTOR SHALL SEED AND MULCH ALL DISTURBED AREAS. WORK SHALL MEET THE REQUIREMENTS OF SECTION 250 AND SECTION 251 OF THE SSRB AND ALL OTHER REFERENCED ARTICLES AND SECTIONS.

TEMPORARY EROSION CONTROL SEEDING

THE CONTRACTOR SHALL APPLY TEMPORARY EROSION CONTROL SEEDING AS INDICATED IN THE PLANS. THIS WORK SHALL MEET THE REQUIREMENTS OF SECTION 280 OF THE SSRB AND ALL OTHER REFERENCED ARTICLES AND SECTIONS.

AGGREGATE BASE COURSE, TYPE A

THE CONTRACTOR SHALL PLACE AGGREGATE BASE COURSE, TYPE A AT A MINIMUM THICKNESS AS SHOWN IN THE PLANS. THE WORK SHALL MEET THE REQUIREMENTS OF SECTION 351 OF THE SSRB AND ALL OTHER REFERENCED ARTICLES AND SECTIONS.

PORTLAND CEMENT CONCRETE DRIVEWAY PAVEMENT

THE CONTRACTOR SHALL PLACE PORTLAND CEMENT CONCRETE DRIVEWAY PAVEMENT AS SHOWN IN THE PLANS. THIS WORK SHALL MEET THE REQUIREMENTS OF SECTION 423 OF THE SSRB AND ALL OTHER REFERENCED ARTICLES AND SECTIONS.

PORTLAND CEMENT CONCRETE SIDEWALK

THE CONTRACTOR SHALL PLACE PORTLAND CEMENT CONCRETE SIDEWALK AS SHOWN IN THE PLANS. THE SIDEWALK CROSS SLOPE SHALL NOT EXCEED 2% , LONGITUDINAL SLOPE SHALL NOT EXCEED 5%. AND SIDEWALK RAMPS SHALL NOT EXCEED 8.33%. THIS WORK SHALL MEET THE REQUIREMENTS OF SECTION 424 OF THE SSRB AND ALL OTHER REFERENCED ARTICLES AND SECTIONS, ILLINOIS ACCESSIBILITY CODE AND/OR PROWAG.

STORM SEWERS

THE CONTRACTOR SHALL INSTALL STORM SEWERS AS SHOWN IN THE PLANS. THE PROPOSED STORM SEWER SHALL BE CLASS B , WITH A MAXIMUM N VALUE OF 0.013, WHEN INSTALLED OUTSIDE OF THE RIGHT-OF-WAY AND CLASS A WHEN INSTALLED IN THE RIGHT-OF-WAY. THIS WORK SHALL MEET THE REQUIREMENTS OF SECTION 550 OF THE SSRB AND ALL OTHER REFERENCED ARTICLES AND SECTIONS.

ALL SUMP PUMP LINES SHALL EXTEND A MINIMUM OF 1 FOOT BEYOND THE SIDEWALK.

INLET TYPE A, INLET TYPE B AND MANHOLES

THE CONTRACTOR SHALL INSTALL INLET TYPE A, INLET TYPE B AND MANHOLES AS SHOWN IN THE PLANS. THIS WORK SHALL MEET THE REQUIREMENTS OF SECTION 602 OF THE SSRB AND ALL OTHER REFERENCED ARTICLES AND SECTIONS.

COMBINATION CONCRETE CURB AND GUTTER

THE CONTRACTOR SHALL PLACE COMBINATION CONCRETE CURB AND GUTTER, AS SHOWN IN THE PLANS. THIS WORK SHALL MEET THE REQUIREMENTS OF SECTION 606 OF THE SSRB AND ALL OTHER REFERENCED ARTICLES AND SECTIONS.

WATER MAIN

THE WATER MAIN SHALL BE FLEX-LOK BOLTLESS BALL JOINT PIPE (AWWA C151 & C153, PRESSURE CLASS 250 OR EQUAL SPECIFICATION) IN ACCORDANCE WITH THE STANDARD SPECIFICATIONS FOR WATER MAIN AND SEWER CONSTRUCTION IN ILLINOIS SEVENTH EDITION OR LATEST VERSION.

THE PIPE BEDDING MATERIAL FOR FLEXIBLE PIPE SHALL BE PLACED A MINIMUM OF 4" BELOW THE PIPE AND MINIMUM OF 12" ABOVE THE PIPE AND SHALL BE CLASS II MEETING ASTM D2321 AS DESCRIBED IN SECTION 20-4.05 AND 20-4.06 OF THE STANDARD SPECIFICATIONS FOR WATER MAIN AND SEWER CONSTRUCTION IN ILLINOIS SEVENTH EDITION OR LATEST VERSION.

DISINFECTING AND WATER MAIN TESTING SHALL BE PERFORMED IN ACCORDANCE WITH THE STANDARD SPECIFICATIONS FOR WATER MAIN AND SEWER CONSTRUCTION IN ILLINOIS SEVENTH EDITION OR LATEST VERSION. THIS WORK SHALL INCLUDE PRESSURE TESTING.

THE SEPARATION OF WATER MAINS FROM SEWER MAINS SHALL BE IN ACCORDANCE WITH SECTIONS 41-2.01A AND SECTION 41-2.01B OF THE STANDARD SPECIFICATIONS FOR WATER MAIN AND SEWER CONSTRUCTION IN ILLINOIS SEVENTH EDITION OR LATEST VERSION.

CONCRETE THRUST BLOCKS

CONCRETE THRUST BLOCKS SHALL CONFORM TO THE LATEST VERSION AND THE STANDARD SPECIFICATIONS FOR WATER MAIN AND SEWER CONSTRUCTION IN ILLINOIS SEVENTH EDITION OR LATEST VERSION.

SANITARY SEWER

THE SANITARY SEWER SHALL BE POLYVINYL CHLORIDE WITH A STANDARD DIMENSION RATIO OF 26. THE JOINTS SHALL BE FLEXIBLE SEALS. THE PVC SEWER PIPE AND JOINTS SHALL BE IN ACCORDANCE WITH SECTION 30-4.04 OF THE STANDARD SPECIFICATIONS FOR WATER MAIN AND SEWER CONSTRUCTION IN ILLINOIS SEVENTH EDITION OR LATEST VERSION.

THE PIPE BEDDING MATERIAL SHALL BE PLACED A MINIMUM OF 4" BELOW THE PIPE AND MINIMUM OF 12" ABOVE THE PIPE AND SHALL BE CLASS II MEETING ASTM D2321 AS DESCRIBED IN SECTION 20-4.05 AND 20-4.06 OF THE STANDARD SPECIFICATIONS FOR WATER MAIN AND SEWER CONSTRUCTION IN ILLINOIS SEVENTH EDITION OR LATEST VERSION.

THE SEPARATION OF WATER MAINS FROM SEWER MAINS SHALL BE IN ACCORDANCE WITH SECTIONS 41-2.01A AND SECTION 41-2.01B OF THE STANDARD SPECIFICATIONS FOR WATER MAIN AND SEWER CONSTRUCTION IN ILLINOIS SEVENTH EDITION OR LATEST VERSION.

THE SANITARY SEWER SHALL BE PLACED IN ACCORDANCE WITH SECTION 31 OF THE STANDARD SPECIFICATIONS FOR WATER MAIN AND SEWER CONSTRUCTION IN ILLINOIS SEVENTH EDITION OR LATEST VERSION AND THE CITY OF DECATUR, ILLINOIS CONSTRUCTION STANDARDS.

THE SANITARY SEWER LEAKAGE TESTING SHALL BE THE AIR TESTING METHOD AS DESCRIBED IN THE SSWSC.

THE SANITARY SEWER DEFLECTION TESTING SHALL BE IN ACCORDANCE WITH SECTION 31-1.13 OF THE STANDARD SPECIFICATIONS FOR WATER MAIN AND SEWER CONSTRUCTION IN ILLINOIS SEVENTH EDITION OR LATEST VERSION, WHICH SHALL INCLUDE THE USE OF A MANDREL.

THE SANITARY SEWER SHALL ALSO BE VIDEO TAPED. TWO COPIES OF THE VIDEO ON DVD OR CD ALONG WITH THE REPORT MUST BE PROVIDED TO THE ENGINEER PRIOR TO APPROVAL.

SANITARY MANHOLES SHALL BE TESTED FOR WATERTIGHTNESS BY EITHER OF THE FOLLOWING METHODS; ASTM C 969 OR ASTM C 1244.

PORTLAND CEMENT CONCRETE ROADWAY PAVEMENT

THE CONTRACTOR SHALL PLACE PORTLAND CEMENT CONCRETE ROADWAY PAVEMENT AS SHOWN IN THE PLANS. THIS WORK SHALL MEET THE REQUIREMENTS OF SECTION 420 OF THE SSRB AND ALL OTHER REFERENCED ARTICLES AND SECTIONS.

BY	DATE	REVISION/ISSUED
CR	1/22/2018	PRELIM PLAT RESUBMITTAL

PROJECT NO.	6615
FIELD BOOK NO.	XXX
START DATE	AUGUST 2017
DRAWN BY	CR
CHECKED BY	MEC
C&A REF. NO.	5899, 6136
PWC REF. NO.	XXXX, XXXX
FILE LOCATION	I:\....\.....

CHASTAIN & ASSOCIATES LLC
CONSULTING ENGINEERS
DECATUR (217) 422-8544
SCHAUMBURG (773) 714-0050
ROCKFORD (815) 489-0050
184-001397

STATE OF ILLINOIS
MARY E. CAVE
062-060331
PROFESSIONAL ENGINEER
EXP. 11/30/17

GENERAL NOTES/SPEC
SOUTHEAST PLACE
FITZGERALD RD. & IL RT.121
DECATUR, IL

sheet no. C-3
project no. 6615

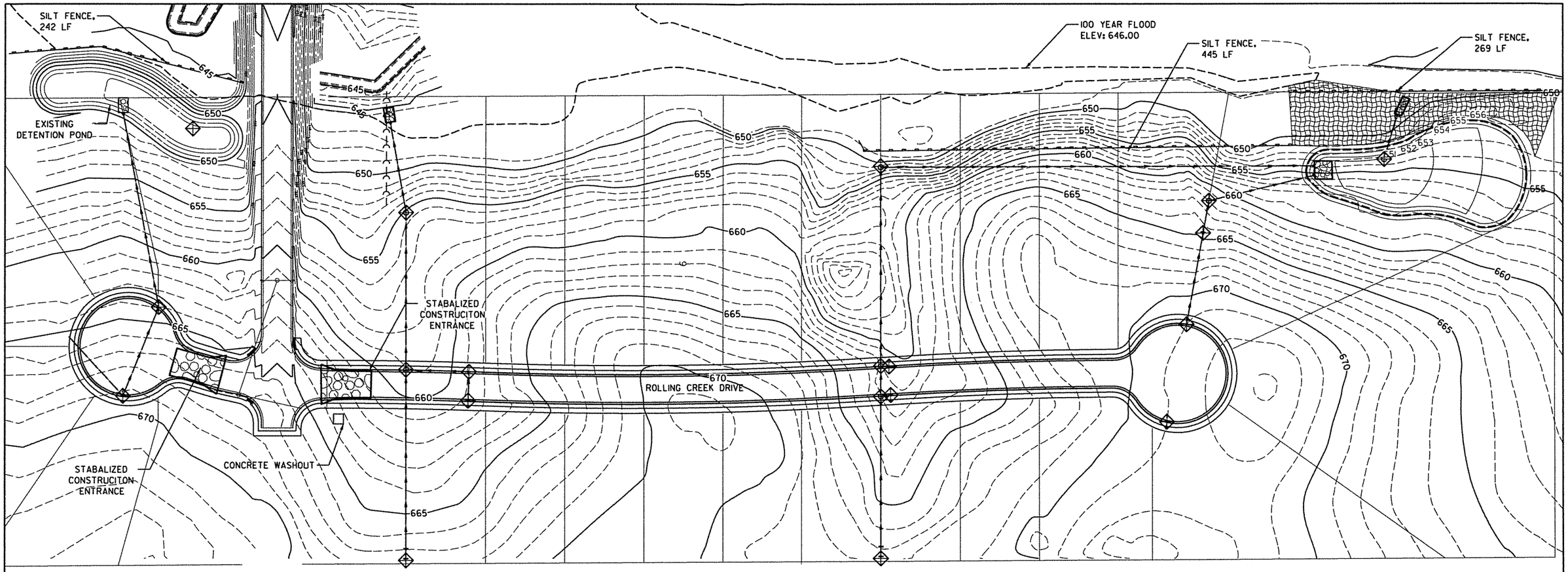

NOTES:

1.SITE ACREAGE: 17.71 AC

2.LAND DISTURBED: 17.71 AC

3.CONTRACTOR SHALL REFERENCE GENERAL NOTES AND SPECIFICATIONS SHEET FOR NOTES AND SPECIFICATIONS RELATING TO SEEDING OR EROSION CONTROL.

4.ALL EARTHWORK, STORM SEWER MATERIALS AND WORK, PAVING MATERIALS AND WORK TO BE DONE IN ACCORDANCE WITH THE APPLICABLE SECTIONS OF THE ILLINOIS DEPARTMENT OF TRANSPORTATION (IDOT) LATEST STANDARD SPECIFICATIONS, ALL OTHER ITEMS TO BE DONE IN ACCORDANCE WITH CITY OF DECATUR CONSTRUCTION STANDARDS.

5.CONTRACTOR IS RESPONSIBLE FOR OBTAINING ANY AND ALL PERMITS TO WORK IN PUBLIC RIGHT OF WAY. ALL WORK IN PUBLIC RIGHT OF WAY MUST BE DONE BY A CONTRACTOR WHO IS LICENSED AND BONDED BY THE CITY OF DECATUR. THE APPROVAL OF THE SITE PLAN DOES NOT CONSTITUTE THE APPROVAL FOR THE CONTRACTOR TO DO WORK IN THE PUBLIC RIGHT OF WAY WITHOUT SAID PERMITS.

6.EROSION CONTROL SHALL BE FURNISHED (SEE DETAIL SHEET)

7.EROSION CONTROL BLANKETS PER ILLINOIS URBAN MANUAL (IUM) CODE 830 OR HIGH PERFORMANCE MULCH PER IUM CODE 875 SHALL BE USED ON ANY SLOPE 3:1 OR GREATER.

8.EROSION CONTROL SEDIMENT TRAPS PER NATURAL RESOURCES CONSERVATION SERVICE (NRCS) STANDARD DRAWING IL 660 SHALL BE USED AT LOCATION SHOWN ON PLANS.

9.EROSION CONTROL ROCK CHECK DAM PER NATURAL RESOURCES CONSERVATION SERVICE (NRCS) STANDARD DRAWING IL 605R SHALL BE USED AT LOCATION SHOWN ON PLANS.

CONSTRUCTION SEQUENCE:

1.INSTALL SEDIMENT & EROSION CONTROL MEASURES.

2.TOPSOIL REMOVAL

3.ROUGH GRADING, TEMPORARY SEEDING

4.UNDERGROUND UTILITY INSTALL

5.FINE GRADING

6.PAVEMENT CONSTRUCTION

7.LANDSCAPE & SITE STABILIZATION

8.REMOVAL OF SEDIMENT & EROSION CONTROL

COVERAGE BY IDOT PERMIT : ILR 10P146

N

0 50 100 150

SCALE IN FEET

LEGEND

PERIMTER EROSION CONTROL

INLET PROTECTION

CONCRETE WASHOUT

EROSION CONTROL BLANKET

ROCK RIP RAP

USER NAME = crickard	DESIGNED -	REVISED -	CR DRAINAGE 1/22/2018
	DRAWN -	REVISED -	
PLOT SCALE = 50.0000 ' / in.	CHECKED -	REVISED -	
PLOT DATE = 1/23/2018	DATE -	REVISED -	

CHASTAIN & ASSOCIATES LLC
CONSULTING ENGINEERS

DECATUR (217) 422-8544
SCHAUMBURG (773) 714-0050
ROCKFORD (815) 489-0050
184-001397

SOUTHEAST PLACE
SWPPP AND EXISTING CONTOURS

SCALE: 1" = 50' | SHEET C4 OF 14 SHEETS | STA. ____ TO STA. ____

F.A. RTE.	SECTION	COUNTY	TOTAL SHEETS	SHEET NO.
			14	C4

CONTRACT NO. ___

ILLINOIS | FED. AID PROJECT

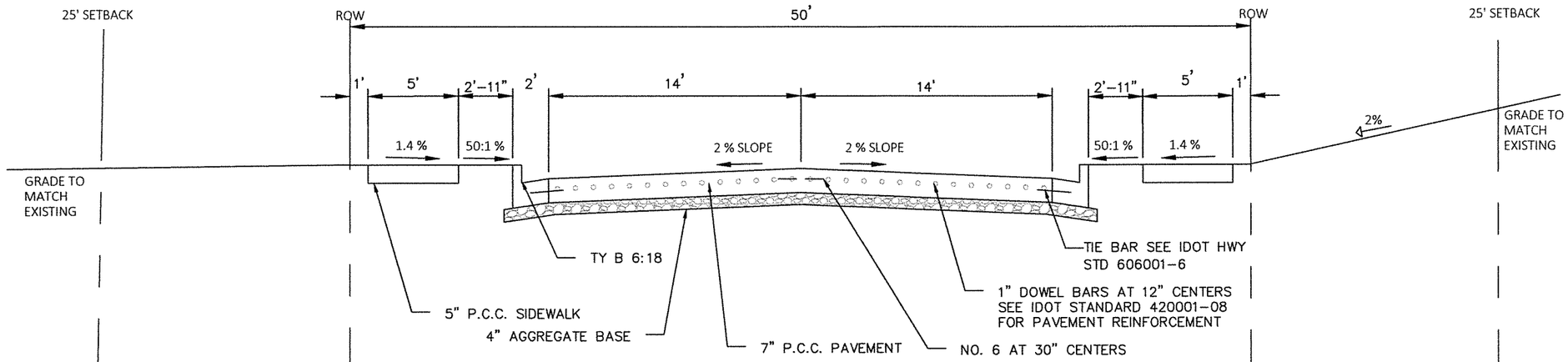

SOUTHEAST PLACE TYPICAL CROSS SECTION

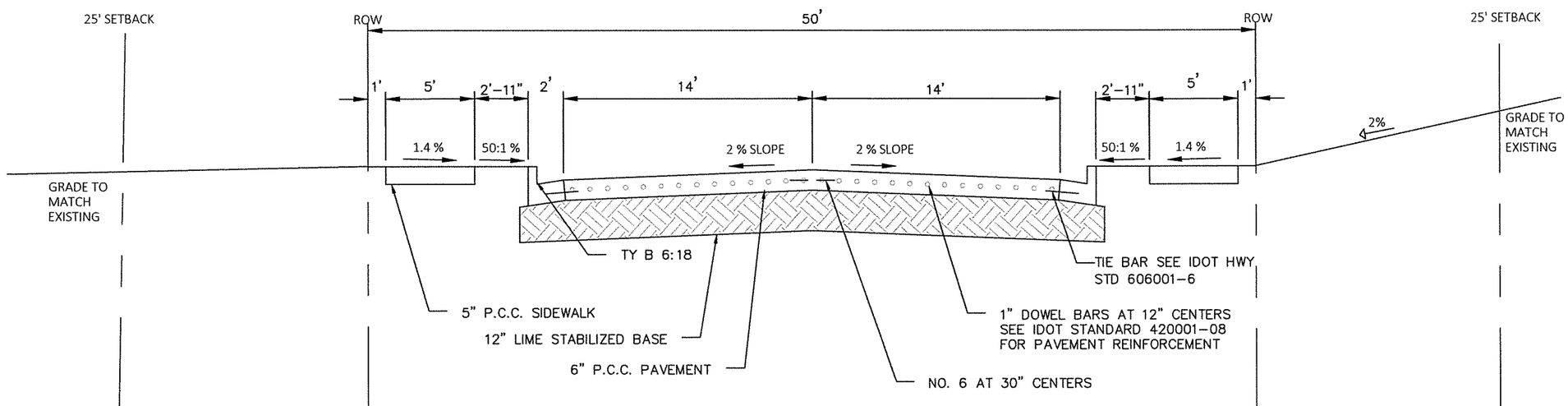

ALTERNATE SOUTHEAST PLACE TYPICAL CROSS SECTION

BY	DATE	REVISION/ISSUED
CR	11/27/2018	PRELIM PLAT RESUBMITTAL

PROJECT NO.	6615
FIELD BOOK NO.	XXX
START DATE	AUGUST 2017
DRAWN BY	CR
CHECKED BY	MEC
C&A REF. NO.	5899, 6136
PWC REF. NO.	XXXX, XXXX
FILE LOCATION	

CHASTAIN & ASSOCIATES LLC
CONSULTING ENGINEERS
DECATUR (217) 422-8544
SCHAUMBURG (773) 714-0050
ROCKFORD (815) 489-0050
184-001397

STATE OF ILLINOIS
MARY E. CAVE
062-060331
PROFESSIONAL ENGINEER
EXP. 11/30/17

TYPICAL CROSS SECTIONS
SOUTHEAST PLACE
FITZGERALD RD. & IL RT.121
DECATUR, IL

sheet no.
C-5

project no.
6615

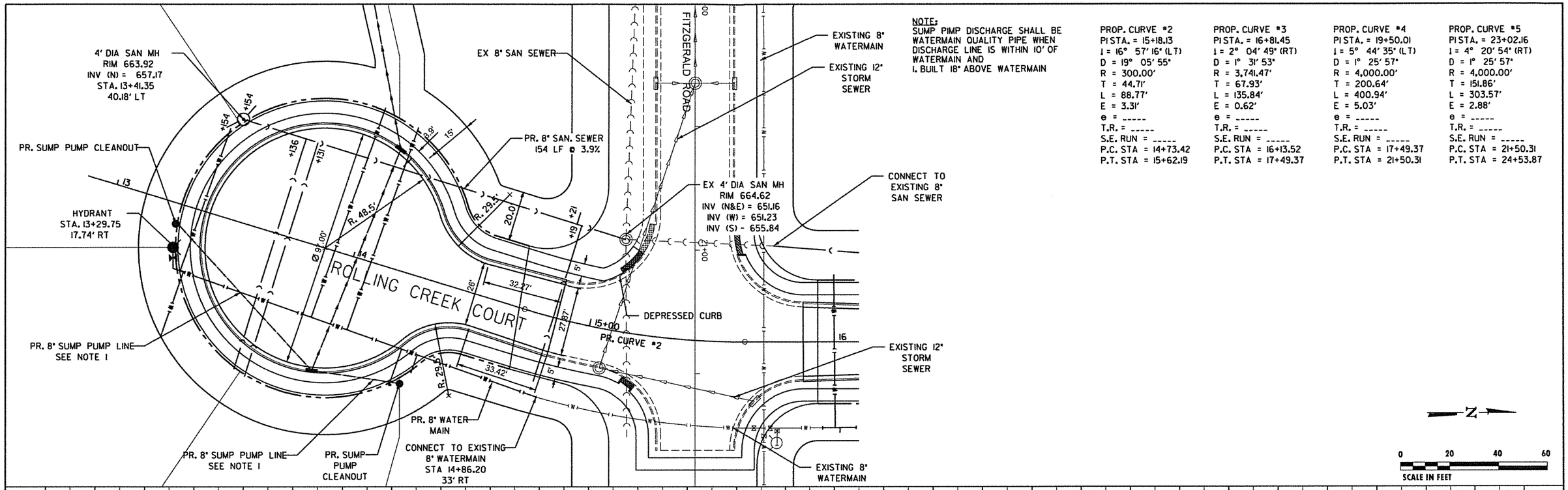

NOTE:
SUMP PIMP DISCHARGE SHALL BE WATERMAIN QUALITY PIPE WHEN DISCHARGE LINE IS WITHIN 10' OF WATERMAIN AND
1. BUILT 18" ABOVE WATERMAIN

PROP. CURVE #2	PROP. CURVE #3	PROP. CURVE #4	PROP. CURVE #5
PI STA. = 15+18.13	PI STA. = 16+81.45	PI STA. = 19+50.01	PI STA. = 23+02.16
I = 16° 57' 16" (LT)	I = 2° 04' 49" (RT)	I = 5° 44' 35" (LT)	I = 4° 20' 54" (RT)
D = 19° 05' 55"	D = 1° 31' 53"	D = 1° 25' 57"	D = 1° 25' 57"
R = 300.00'	R = 3,741.47'	R = 4,000.00'	R = 4,000.00'
T = 44.71'	T = 67.93'	T = 200.64'	T = 151.86'
L = 88.77'	L = 135.84'	L = 400.94'	L = 303.57'
E = 3.31'	E = 0.62'	E = 5.03'	E = 2.88'
e = -----	e = -----	e = -----	e = -----
T.R. = -----	T.R. = -----	T.R. = -----	T.R. = -----
S.E. RUN = -----	S.E. RUN = -----	S.E. RUN = -----	S.E. RUN = -----
P.C. STA = 14+73.42	P.C. STA = 16+13.52	P.C. STA = 17+49.37	P.C. STA = 21+50.31
P.T. STA = 15+62.19	P.T. STA = 17+49.37	P.T. STA = 21+50.31	P.T. STA = 24+53.87

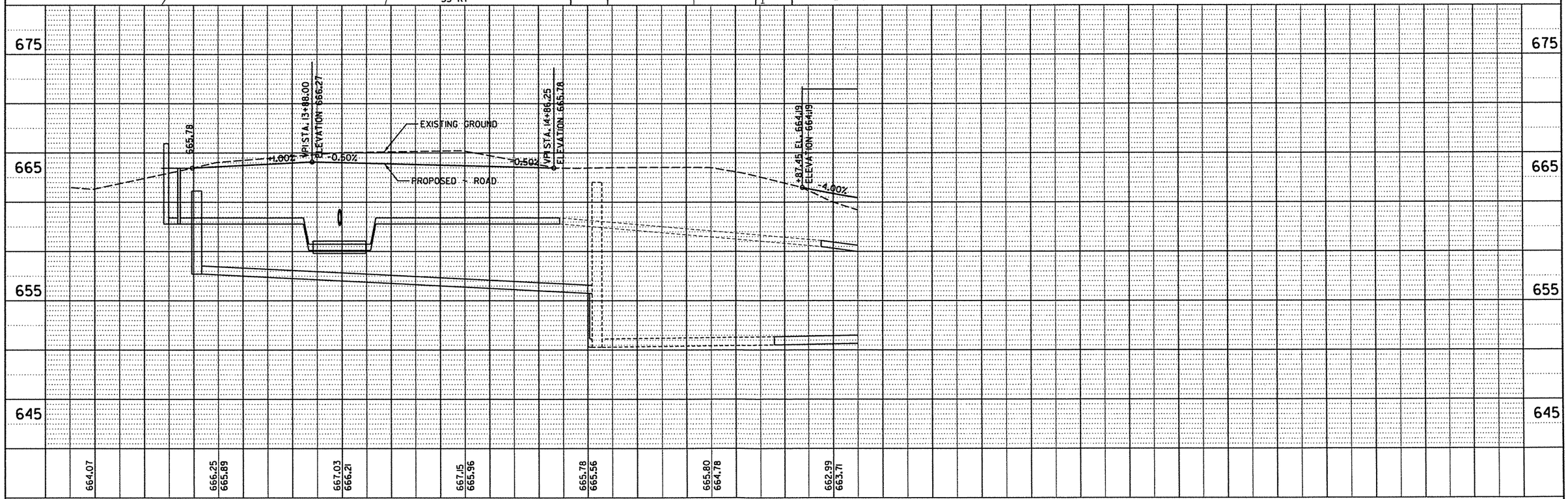

DESIGNED - MBF	REVISED - CR IEPA 11/14/2017		
DRAWN - JDM	REVISED -		
CHECKED - MBF	REVISED -		
DATE - 10/10/2017	REVISED -		

CHASTAIN & ASSOCIATES LLC
CONSULTING ENGINEERS

DECATUR (217) 422-8544
SCHAUMBURG (773) 714-0050
ROCKFORD (815) 489-0050
184-001397

ROLLING CREEK COURT/DRIVE
PLAN & PROFILE

SCALE: 1" = 20' | SHEET NO. C6 OF 14 SHEETS | STA. 13+00 STA. 16+00

F.A. RTE.	SECTION	COUNTY	TOTAL SHEETS	SHEET NO.
			14	C6

CONTRACT NO. ___

FED. ROAD DIST. NO. _ | ILLINOIS | FED. AID PROJECT

PLAN: SURVEYED / PLOTTED / ALIGNMENT CHECKED / RT. OF WAY CHECKED / CADD FILE NAME / NOTE BOOK NO. / BY / DATE

PROFILE: SURVEYED / PLOTTED / GRADES CHECKED / B.M. NOTED / STRUCTURE NOTATNS CHKD / NOTE BOOK NO. / BY / DATE

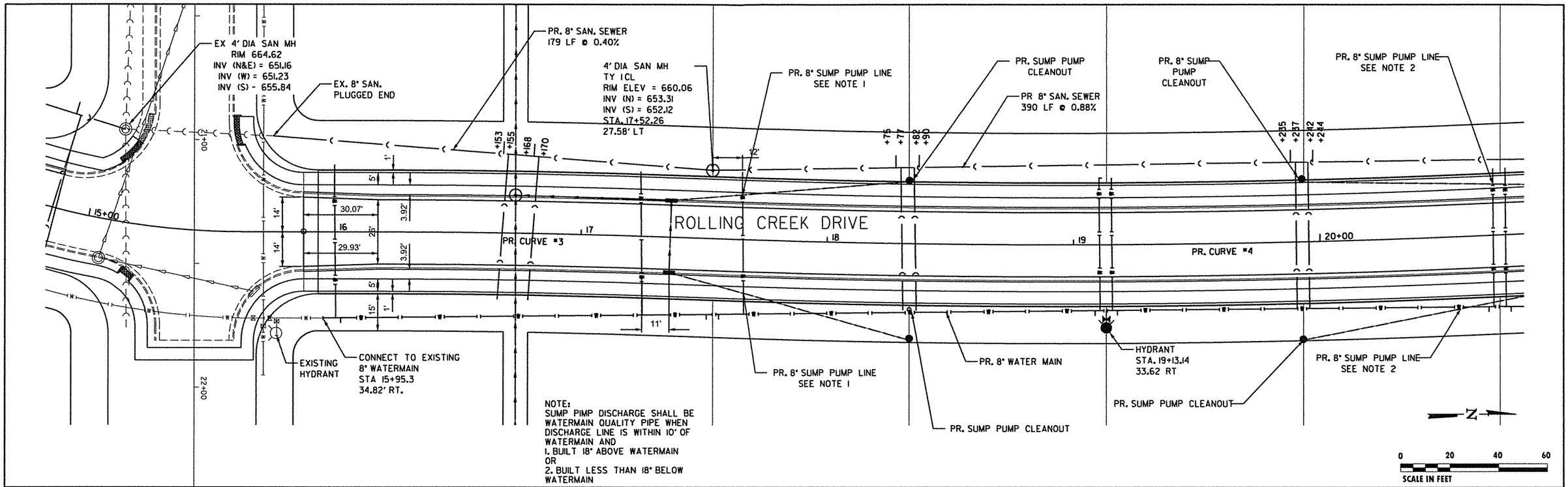

PLAN
NOTE BOOK NO.
SURVEYED
PLOTTED
ALIGNMENT CHECKED
RT. OF WAY CHECKED
CADD FILE NAME
BY
DATE

PROFILE
NOTE BOOK NO.
SURVEYED
PLOTTED
GRADES CHECKED
B.M. NOTED
STRUCTURE NOTAT'NS CH'KD
BY
DATE

DESIGNED	MBF	REVISED	CR IEPA 11/14/2017
DRAWN	JDM	REVISED	
CHECKED	MBF	REVISED	
DATE	10/10/2017	REVISED	

CHASTAIN & ASSOCIATES LLC
CONSULTING ENGINEERS

DECATUR (217) 422-8544
SCHAUMBURG (773) 714-0050
ROCKFORD (815) 489-0050
184-001397

ROLLING CREEK COURT/DRIVE
PLAN & PROFILE

SCALE: 1" = 20' | SHEET NO. C7 OF 14 SHEETS | STA. 15+00 STA. 20+50

F.A. RTE.	SECTION	COUNTY	TOTAL SHEETS	SHEET NO.
			14	C7

CONTRACT NO.

FED. ROAD DIST. NO. | ILLINOIS | FED. AID PROJECT

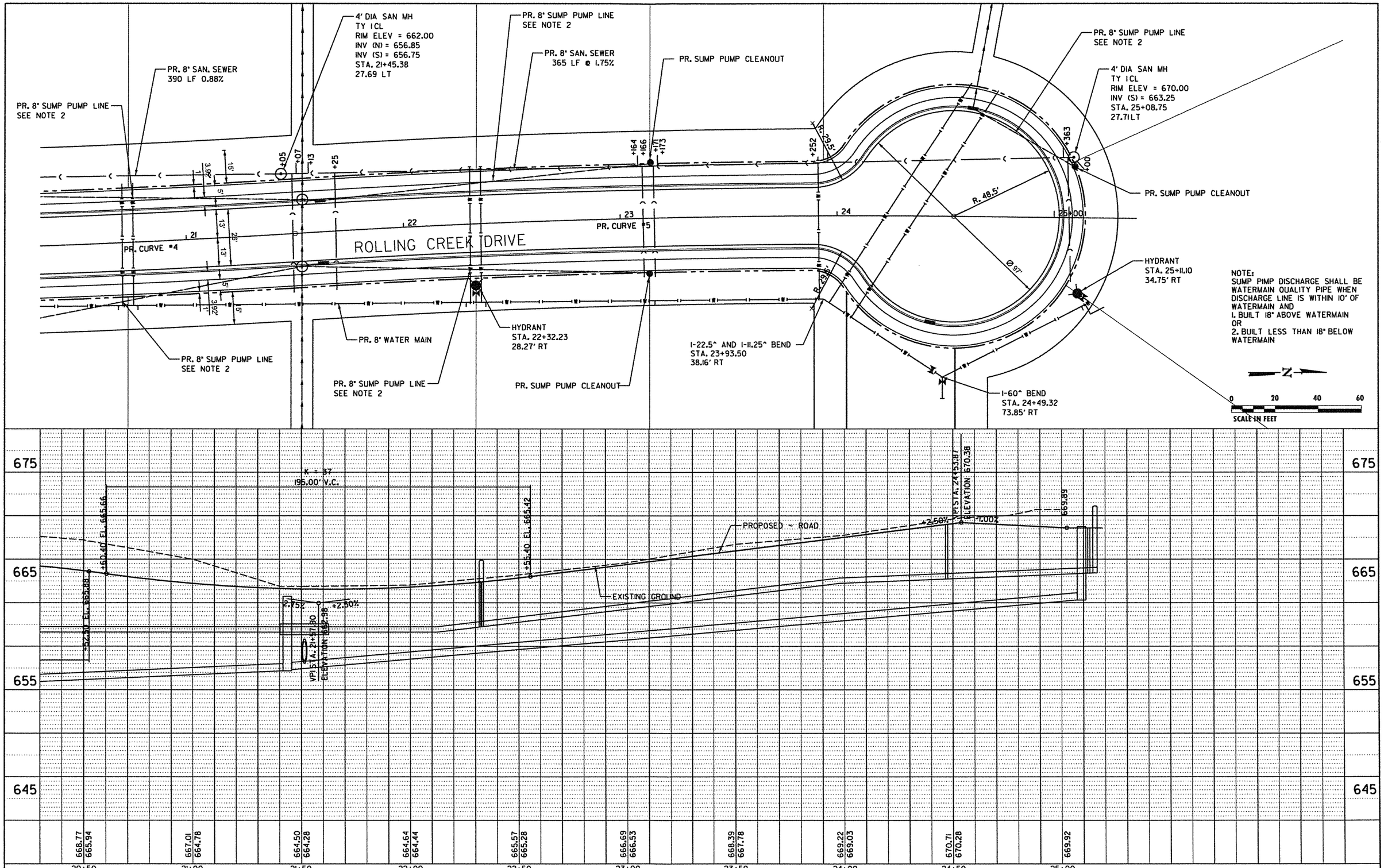

PLAN
NOTE BOOK NO.
SURVEYED
PLOTTED
ALIGNMENT CHECKED
RT. OF WAY CHECKED
CADD FILE NAME
BY
DATE

PROFILE
NOTE BOOK NO.
SURVEYED
PLOTTED
GRADES CHECKED
B.M. NOTED
STRUCTURE NOTAT'NS CHK'D
BY
DATE

DESIGNED - MBF	REVISED - CR IEPA 11/14/2017		
DRAWN - JDM	REVISED -		
CHECKED - MBF	REVISED -		
DATE - 10/10/2017	REVISED -		

CHASTAIN & ASSOCIATES LLC
CONSULTING ENGINEERS

DECATUR (217) 422-8544
SCHAUMBURG (773) 714-0050
ROCKFORD (815) 489-0050
184-001397

ROLLING CREEK COURT/DRIVE
PLAN & PROFILE

SCALE: 1" = 20' | SHEET NO. C8F 14 SHEETS | STA. 20+50 STA. 25+02.37

F.A. RTE.	SECTION	COUNTY	TOTAL SHEETS	SHEET NO.
			14	C8

CONTRACT NO. ___

FED. ROAD DIST. NO. _ | ILLINOIS | FED. AID PROJECT

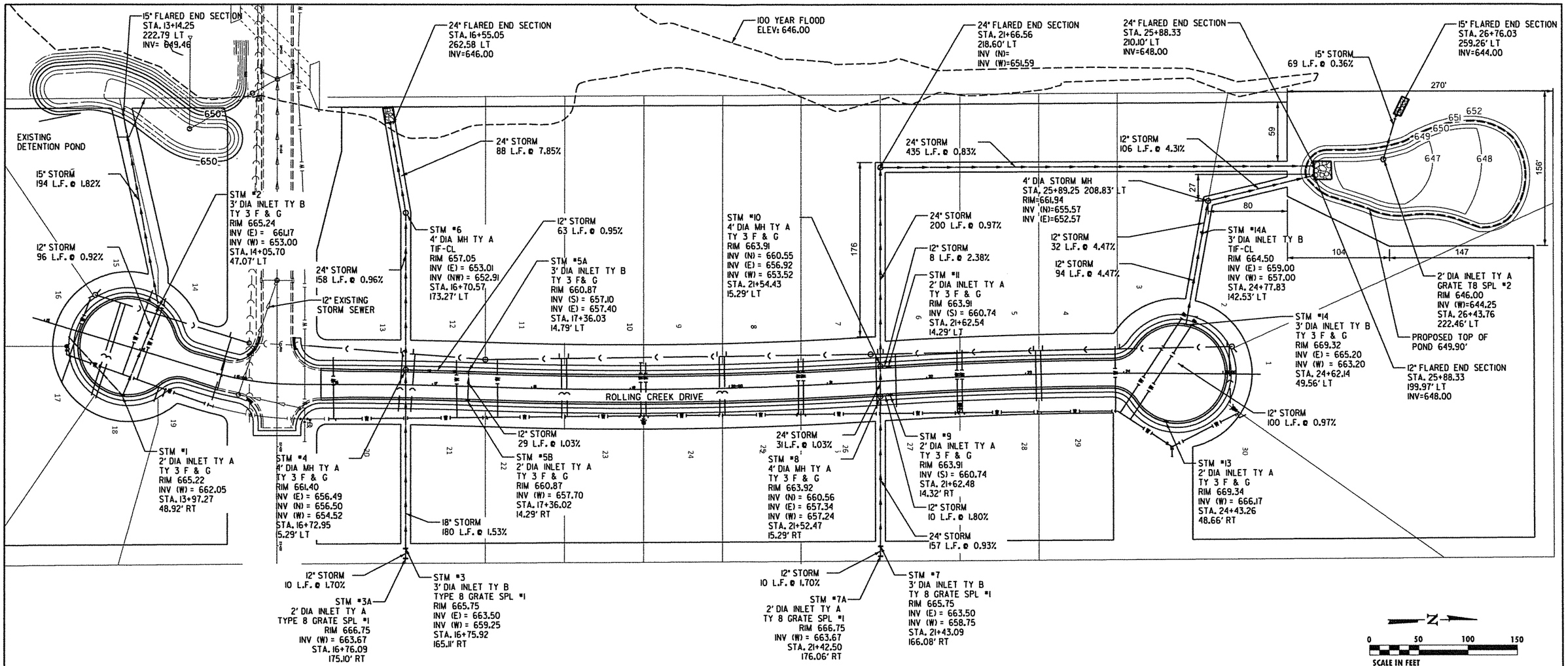

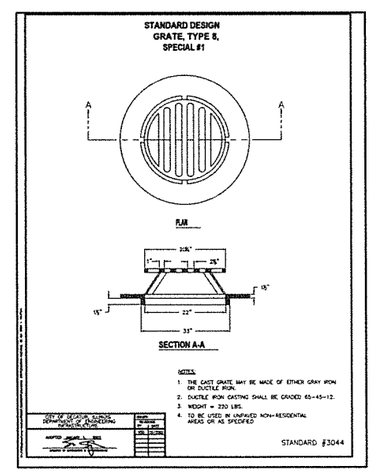

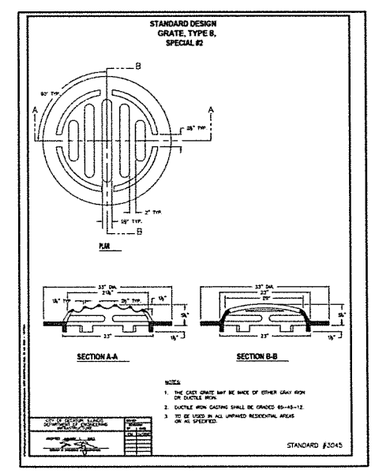

USER NAME	= crickard	DESIGNED	-	REVISED	- MBF 10/25/2017
		DRAWN	-	REVISED	- CR DRAINAGE 1/22/2018
PLOT SCALE	= 50.0000 ' / in.	CHECKED	-	REVISED	-
PLOT DATE	= 1/23/2018	DATE	-	REVISED	-

CHASTAIN & ASSOCIATES LLC
CONSULTING ENGINEERS

DECATUR (217) 422-8544
SCHAUMBURG (773) 714-0050
ROCKFORD (815) 489-0050
184-001397

SOUTHEAST PLACE
DRAINAGE PLAN

SCALE: 1" = 50' | SHEET C9 OF 14 SHEETS | STA. | TO STA.

F.A. RTE.	SECTION	COUNTY	TOTAL SHEETS	SHEET NO.
			14	C9

CONTRACT NO.

ILLINOIS | FED. AID PROJECT

GENERAL NOTES:

1. PROPOSED GRADES HOLD OVER PROPOSED ELEVATIONS.
2. CONTRACTOR SHALL LOCATE PROPOSED CURB CUTS AND VERIFY FLOWLINE ELEVATIONS PRIOR TO CONSTRUCTING ANY SIDEWALK IMPROVEMENTS.
3. GRADES WITH "(MAX)" INDICATE LOCATIONS CRITICAL FOR PROWAG COMPLIANCE. THESE GRADES SHALL NOT BE EXCEEDED UNDER ANY CIRCUMSTANCES.

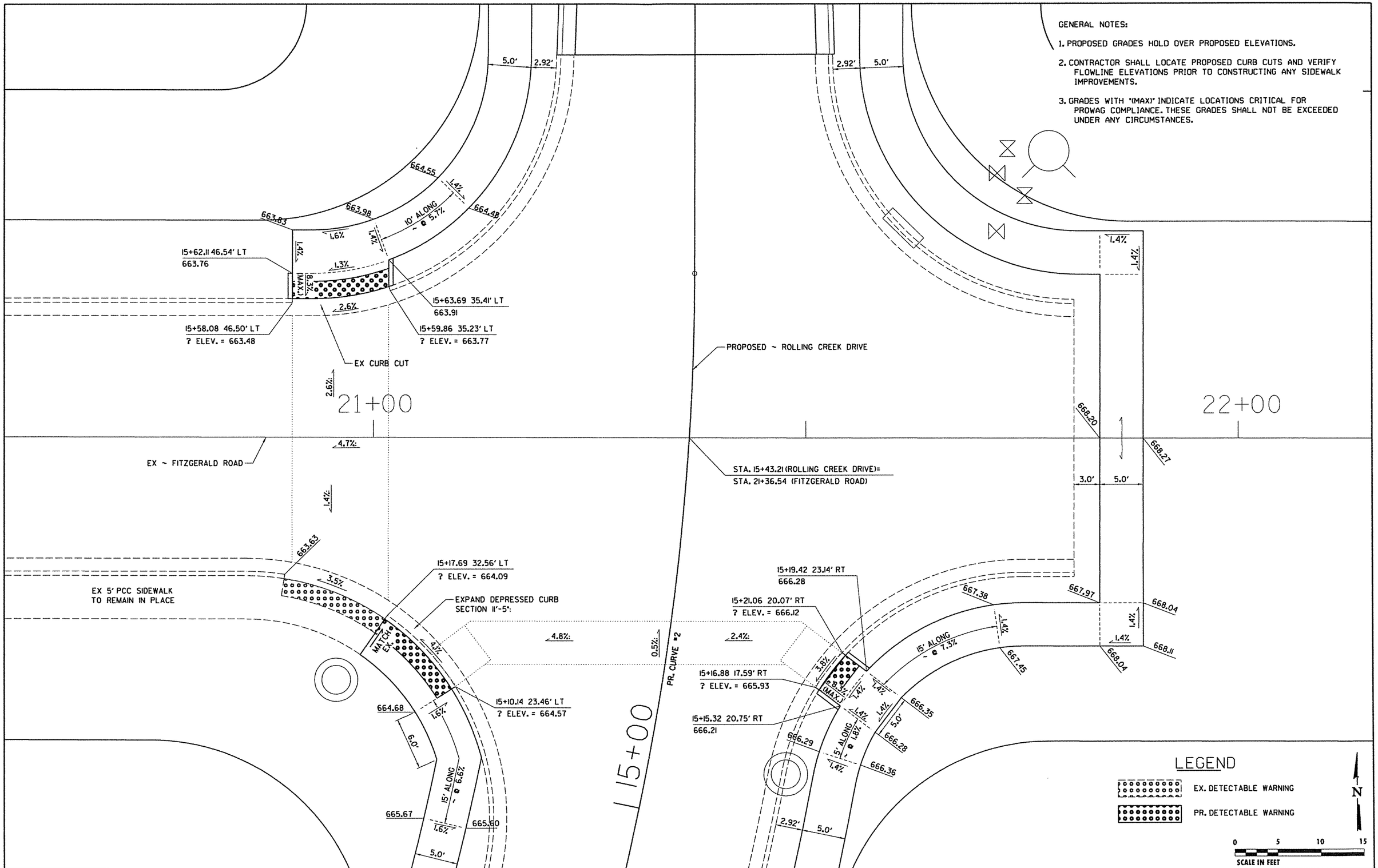

PLAN — NOTE BOOK NO. — SURVEYED / PLOTTED / ALIGNMENT CHECKED / RT. OF WAY CHECKED / CADD FILE NAME — BY — DATE

PROFILE — NOTE BOOK NO. — SURVEYED / PLOTTED / GRADES CHECKED / B.M. NOTED / STRUCTURE NOTATNS CHKD — BY — DATE

DESIGNED	MBF	REVISED	1/22/18 PRELIM PLAT RESUBMITTAL
DRAWN	RLK	REVISED	-
CHECKED	-	REVISED	-
DATE	10/6/2017	REVISED	-

CHASTAIN & ASSOCIATES LLC
CONSULTING ENGINEERS

DECATUR (217) 422-8544
SCHAUMBURG (773) 714-0050
ROCKFORD (815) 489-0050
184-001397

FITZGERALD ROAD AND ROLLING CREEK COURT
SIDEWALK RAMP DETAILS

SCALE: 1" = 5' | SHEET NO. C10 OF 14 SHEETS | STA. TO STA.

F.A. RTE.	SECTION	COUNTY	TOTAL SHEETS	SHEET NO.
			14	C10
		CONTRACT NO.		
FED. ROAD DIST. NO.	ILLINOIS	FED. AID PROJECT		

STANDARD DESIGN
COMBINATION CONCRETE CURB AND GUTTER

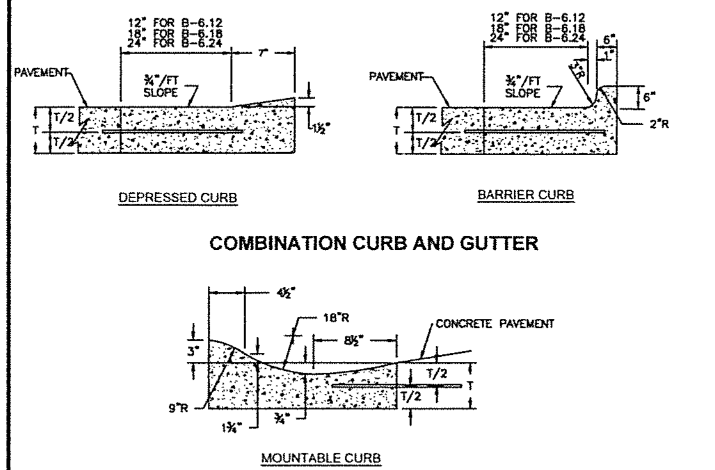

NOTES:

1. "T"= SAME AS ADJACENT PAVEMENT OR 8", WHICHEVER IS GREATER.
2. FOR PCC PAVEMENT TIE BARS SHALL BE A #4 DEFORMED BAR 24" LONG AT 24" CENTERS.
3. THE CURB OR CURB AND GUTTER MAY BE POURED USING AN APPROVED MECHANICAL SLIP FORM CURB MACHINE. IF SLIP FORM, THE PLACEMENT OF ANY REQUIRED TIE BARS OR DOWEL BARS SHALL BE INSTALLED AS DIRECTED BY THE CITY ENGINEER.
4. BITUMINOUS PAVEMENT ADJACENT TO GUTTER WILL BE LAID 1/4" HIGHER THAN EDGE OF GUTTER.

CITY OF DECATUR, ILLINOIS
DEPARTMENT OF ENGINEERING & INFRASTRUCTURE
ENGINEERING DIVISION

STANDARD# 1010
SHEET #1 OF 2

STANDARD DESIGN
MANHOLE TYPE A

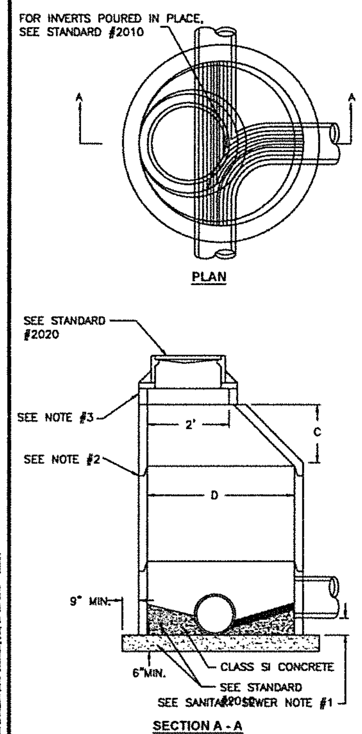

SANITARY SEWER NOTES:

1. FOR VERTICAL SEPARATIONS GREATER THAN 2' USE DROP STACK, STANDARD 2030.

STORM SEWER NOTES:

1. HALF TRAP REQUIRED IF OUTLET IS TO A COMBINATION SEWER SYSTEM.

GENERAL NOTES:

1. PRECAST MANHOLE SECTIONS ARE REQUIRED. POURED IN PLACE MANHOLES MUST BE APPROVED IN WRITING BY THE CITY ENGINEER.
2. ALL MASONRY JOINTS IN THE STRUCTURE SHALL BE SEALED USING PERMAGUM ROPE MASTIC OR APPROVED EQUAL. ADJUSTING RINGS AND THE CASTING SHALL BE SEALED USING 2 LOOPS OF 3/4" PERMAGUM ROPE MASTIC.
3. FINAL UPWARD ADJUSTMENT TO GRADE SHALL BE MADE USING PRECAST CONCRETE ADJUSTING RINGS. IF THE REQUIRED ADJUSTMENT IS 16" OR GREATER, ADDITIONAL MANHOLE SECTIONS SHALL BE INSTALLED BELOW THE CONE. DOWNWARD ADJUSTMENT SHALL BE ACCOMPLISHED BY REMOVING EXISTING MASONRY UNITS AND ADJUSTING TO FINAL GRADE AS OUTLINED ABOVE.
4. ENTIRE EXCAVATION TO BE BACKFILLED WITH TRENCH BACKFILL MATERIAL AS SPECIFIED IN STANDARD #2050. BACKFILL AROUND PIPE SHALL BE IN ACCORDANCE WITH STANDARD #2050.
5. FOR PIPES LESS THAN 18", 4' DIAMETER MANHOLE SHALL BE USED. FOR PIPES 24"-42", 5' DIAMETER MANHOLE SHALL BE USED.

ALTERNATE MATERIALS FOR WALLS	D	C*	T (MIN.)
PRECAST REINFORCED CONCRETE RISERS	4'-0"	2'-6"	4"
	5'-0"	3'-9"	5"
MONOLITHIC CONCRETE	4'-0"	2'-6"	6"
	5'-0"	3'-9"	6"

*WHEN USING PRECAST REINFORCED CONCRETE RISERS, DIMENSION "C" MAY VARY FROM THAT GIVEN TO PLUS 6 INCHES.

CITY OF DECATUR, ILLINOIS
DEPARTMENT OF ENGINEERING & INFRASTRUCTURE

STANDARD#2000

STANDARD DESIGN
MANHOLE DETAILS

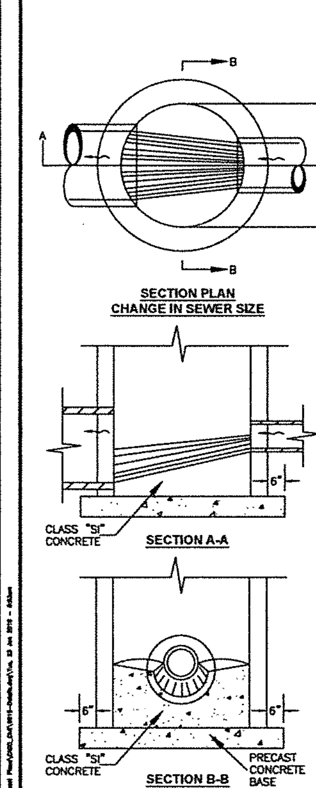

NOTES:

1. WHEN USING COMPOSITE OR PVC PIPE, MANHOLE BASES SHALL BE PRECAST WITH CONNECTION OPENINGS SPECIFICALLY DESIGNED TO ACCOMMODATE THE PIPE CONNECTION STUB AND GASKET. ALL OTHER MANHOLES MAY HAVE POURED IN PLACE, PRECAST, OR PRECAST BOTTOMS WITH PRE FORMED INVERTS. POURED BASES SHALL USE "SI" CONCRETE AND HAVE A DIAMETER EXCEEDING THE MANHOLE OUTSIDE DIAMETER BY A MINIMUM OF 18". ON POURED IN PLACE OR PRECAST BOTTOMS WITHOUT INVERTS, THE INVERT SHALL BE FORMED BY LAYING THE SEWER THROUGH THE MANHOLE. THE BOTTOM SHALL THEN BE SHAPED AS SHOWN IN THE STANDARD AND THE UPPER HALF OF THE SEWER CAREFULLY SAW CUT AND REMOVED.
2. AT MANHOLES WHERE THE PIPE SIZE CHANGES, OR WHERE THERE ARE CHANGES IN DIRECTION, THE INVERT OF THE MANHOLE SHALL BE SHAPED WITH CONCRETE FILL TO ACCOMPLISH THE CHANGE IN ELEVATION, DIAMETER, AND OR DIRECTION BY EASY CURVES. THE CROWN OF THE SMALLER PIPE WILL MATCH THE CROWN OF THE LARGER <u>OR</u> THE INVERT OF THE SMALLER PIPE WILL MATCH THE SPRING LINE OF THE LARGER, WHICHEVER DROP IS LESS.
3. THE METHOD OF SEALING CONNECTION OF SEWER PIPE TO MANHOLE SHALL BE APPROVED BY THE CITY ENGINEER AND SHALL BE SUCH AS TO PROVIDE A WATERTIGHT JUNCTION ELIMINATING ALL INFILTRATION AROUND THE PIPE. MORTAR SHALL NOT BE USED.

CITY OF DECATUR, ILLINOIS
DEPARTMENT OF ENGINEERING INFRASTRUCTURE

STANDARD#2010

STANDARD DESIGN
FRAME AND LIDS
TYPE 1

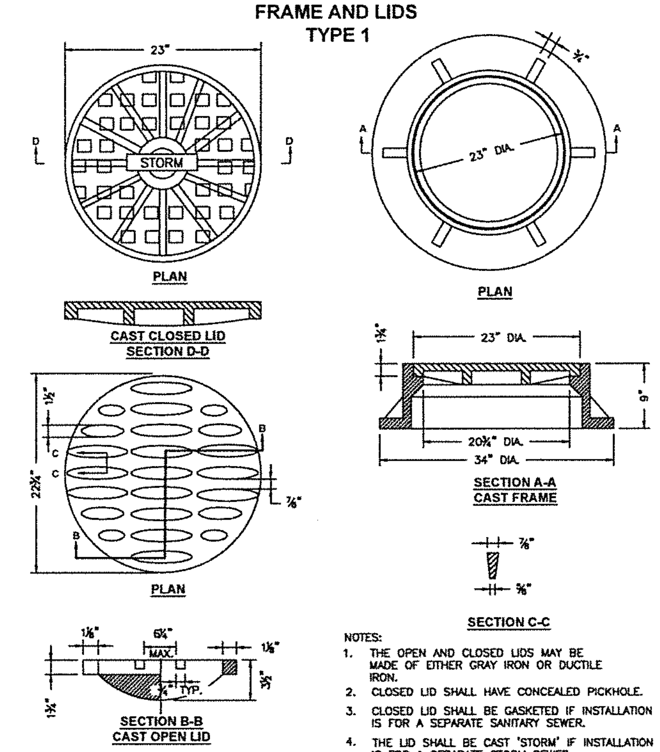

NOTES:

1. THE OPEN AND CLOSED LIDS MAY BE MADE OF EITHER GRAY IRON OR DUCTILE IRON.
2. CLOSED LID SHALL HAVE CONCEALED PICKHOLE.
3. CLOSED LID SHALL BE GASKETED IF INSTALLATION IS FOR A SEPARATE SANITARY SEWER.
4. THE LID SHALL BE CAST 'STORM' IF INSTALLATION IS FOR A SEPARATE STORM SEWER.
5. THE LID SHALL BE CAST 'SANITARY' IF INSTALLATION IS FOR A SEPARATE SANITARY SEWER OR COMBINATION SEWERS.
6. THE LID SHALL BE CAST 'COMBINED' IF INSTALLATION IS FOR A COMBINED SEWER.

CITY OF DECATUR, ILLINOIS
DEPARTMENT OF ENGINEERING & INFRASTRUCTURE

STANDARD# 2020

STANDARD DESIGN
DROP STACK

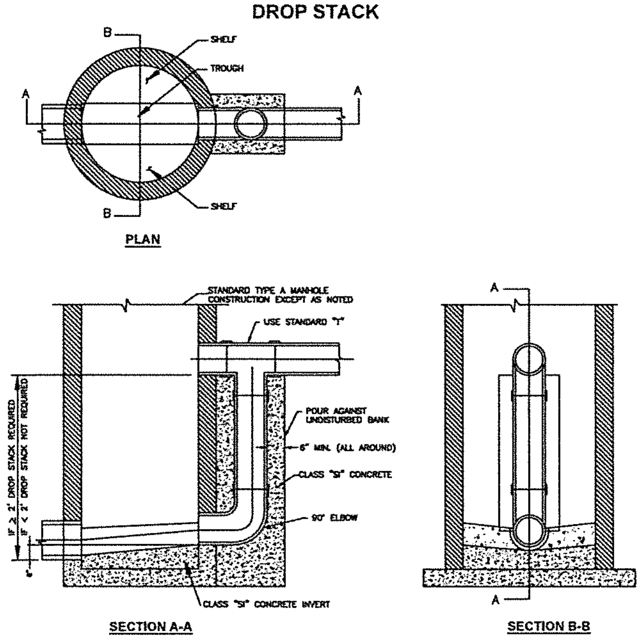

NOTES:

1. ENTIRE EXCAVATION TO BE BACKFILLED WITH TRENCH BACKFILL MATERIAL, IN ACCORDANCE WITH STANDARD #2050, IF ANY EDGE OF EXCAVATION IS WITHIN 2' OF ANY PAVED SURFACE.
2. BACKFILL AROUND PIPE SHALL BE IN ACCORDANCE WITH STANDARD #2050.
3. POURED CONCRETE AROUND DROP STACK PIPE WILL NOT BE REQUIRED IF DROP STACK IS PRECAST WITH MANHOLE.
4. TO BE USED IN CONJUNCTION WITH TYPE "A" MANHOLES WHERE SEWER ENTERS 2'-0" OR MORE ABOVE LOWEST INVERT. NOT TO BE USED FOR INLET OR CATCH BASIN CONNECTIONS.
5. THIS DETAIL APPLIES TO INCOMING SEWER OF 18" DIAMETER OR LESS.
6. FOR INCOMING SEWER SMALLER THAN 12" USE VERTICAL PIPE OF SAME DIAMETER. FOR INCOMING SEWER 12" OR GREATER, USE 12" VERTICAL PIPE.

CITY OF DECATUR, ILLINOIS
DEPARTMENT OF ENGINEERING & INFRASTRUCTURE

ADOPTED JANUARY 1, 2003

STANDARD# 2030

STANDARD DESIGN
CLEANOUT

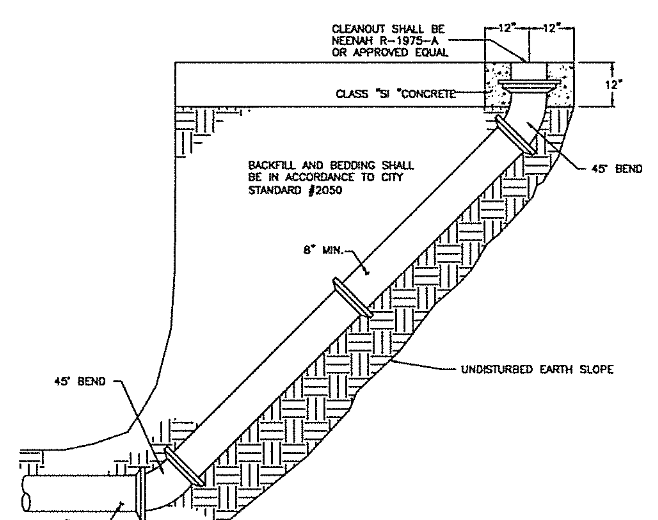

CITY OF DECATUR, ILLINOIS
DEPARTMENT OF ENGINEERING & INFRASTRUCTURE

ADOPTED JANUARY 1, 2003

STANDARD# 2040

STANDARD DESIGN
TRENCH BACKFILL AND BEDDING

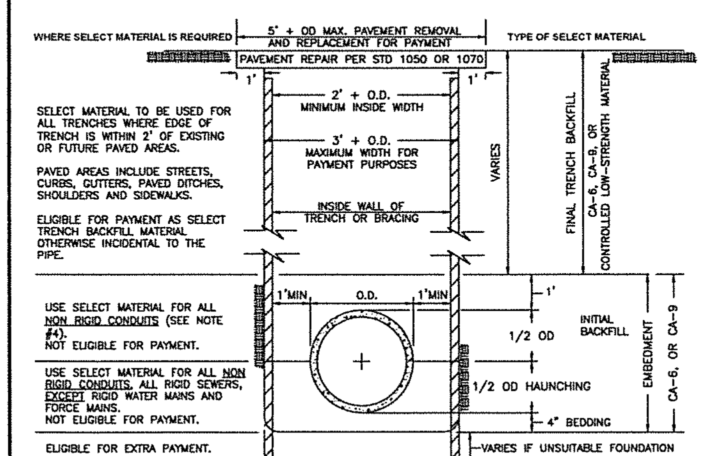

NOTES:

1. WHEN EDGE OF TRENCH IS WITHIN 2' OF ANY PAVED AREA, UNIFORM LAYERS OF SELECT MATERIAL NOT EXCEEDING 8" THICK SHALL BE PLACED AND COMPACTED BY RAMMING OR TAMPING WITH TOOLS APPROVED BY THE ENGINEER TO 95% OF STANDARD PROCTOR DENSITY.
2. WHEN EDGE OF TRENCH IS BEYOND 2' OF ANY PAVED AREA, UNIFORM LAYERS OF SUITABLE EXCAVATED MATERIAL NOT EXCEEDING 12" THICK SHALL BE PLACED AND COMPACTED BY RAMMING OR TAMPING TO THE SATISFACTION AND APPROVAL OF THE ENGINEER.
3. CA-7, CA-11, CA-13, OR CA-16 MAY BE USED FOR TRENCH BACKFILL WHEN AN APPROPRIATE GEOTECHNICAL FABRIC IS USED TO LINE THE TRENCH.
4. <u>NON RIGID CONDUITS</u> ARE DEFINED AS FLEXIBLE THERMOPLASTIC PIPE AND/OR CORRUGATED METAL PIPE.
5. BELLS HOLES WILL BE DUG. NO PIPE WILL ACCEPTED WHERE THE BELLS OF THE PIPE ARE SUPPORTING THE WEIGHT OF THE PIPE.

CITY OF DECATUR, ILLINOIS
DEPARTMENT OF ENGINEERING & INFRASTRUCTURE

ADOPTED JANUARY 1, 2003

STANDARD# 2050
SHEET #1 OF 2

STANDARD DESIGN
TYPICAL HOUSE LATERAL

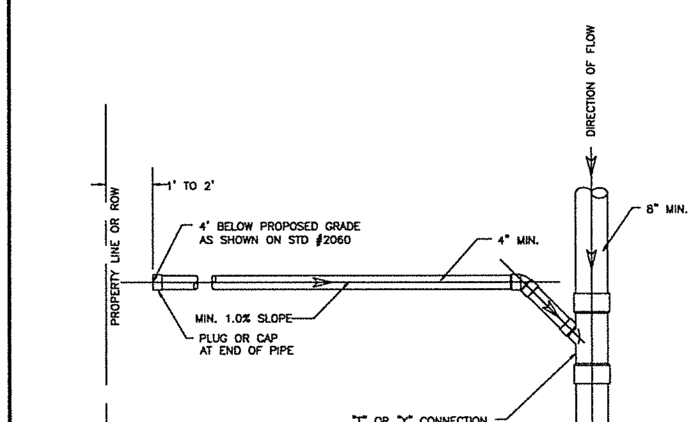

CITY OF DECATUR, ILLINOIS
DEPARTMENT OF ENGINEERING & INFRASTRUCTURE

ADOPTED JANUARY 1, 2003

STANDARD# 2070

BY	DATE	REVISION/ISSUED
CR	1/22/2018	PRELIM PLAT RESUBMITTAL

PROJECT NO.	6615
FIELD BOOK NO.	XXX
START DATE	FEBRUARY 27, 2017
DRAWN BY	LPJ
CHECKED BY	MEC
C&A REF. NO.	5899
PWC REF. NO.	694, 6136
FILE LOCATION	I:\DEVELOPERS\MOSSER

CHASTAIN & ASSOCIATES LLC
CONSULTING ENGINEERS
DECATUR (217) 422-8544
SCHAUMBURG (773) 714-0050
ROCKFORD (815) 489-0050
184-001397

DETAILS

SOUTHEAST PLACE
FITZGERALD RD. & IL RT. 121
DECATUR, IL

sheet no.
C-11
project no.
6615

STANDARD DESIGN
SANITARY SEWER
TAPS AND PLUGS

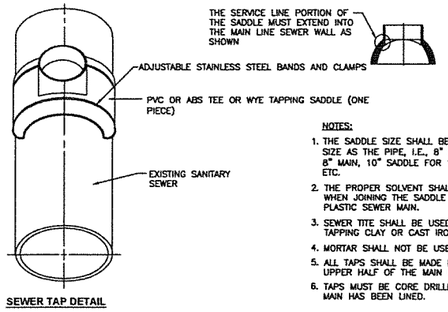

SEWER TAP DETAIL

NOTES:

1. THE SADDLE SIZE SHALL BE THE SAME SIZE AS THE PIPE, I.E., 8" SADDLE FOR 8" MAIN, 10" SADDLE FOR 10" MAIN, ETC.
2. THE PROPER SOLVENT SHALL BE USED WHEN JOINING THE SADDLE TO A PLASTIC SEWER MAIN.
3. SEWER TITE SHALL BE USED WHEN TAPPING CLAY OR CAST IRON SEWERS.
4. MORTAR SHALL NOT BE USED.
5. ALL TAPS SHALL BE MADE IN THE UPPER HALF OF THE MAIN LINE SEWER.
6. TAPS MUST BE CORE DRILLED IF SEWER MAIN HAS BEEN LINED.

SANITARY SEWER PLUGS AND CAPS

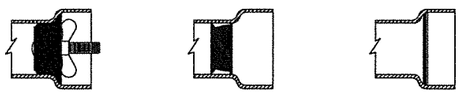

TWIST PLUG — NEOPRENE PLUG — CLAY "PANCAKE"

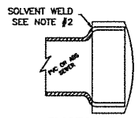

PLASTIC CAP

NOTES:

1. MORTAR SHALL NOT BE USED.
2. THE PROPER SOLVENT SHALL BE USED WHEN JOINING A PLASTIC CAP TO A PLASTIC PIPE.
3. ALL PLUGS SHALL BE PROPERLY INSERTED INTO THE PIPE PROVIDING A WATERTIGHT SEAL.
4. PLUGS AND CAPS OTHER THAN THE TYPES SHOWN HERE MAY BE USED ONLY UPON PERMISSION GIVEN BY THE CITY ENGINEER.

CITY OF DECATUR, ILLINOIS
DEPARTMENT OF ENGINEERING & INFRASTRUCTURE

ISSUED: 1/1/03
REVISIONS BY | DATE
KSG 02/2002

ADOPTED JANUARY 1, 2003

STANDARD# 2071

STANDARD DESIGN
TYPICAL HOUSE SERVICE
LOCATION DETAILS

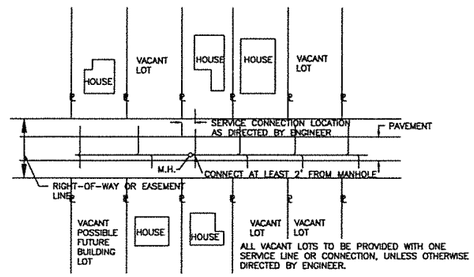

TYPICAL DETAIL-SERVICE CONNECTIONS

NOTES:

1. SERVICE LINE TO EXTEND AS SHOWN ON DETAIL AND PLAN SHEETS, EXACT LOCATION OF SERVICES AND "Y" BRANCHES TO BE ESTABLISHED DURING CONSTRUCTION.
2. SERVICE LINES TO BE LAID AT NOT LESS THAN 1.0% GRADE.
3. ALL "Y" BRANCHES (FUTURE CONNECTIONS) AND LATERAL SERVICE LINES SHALL BE PLUGGED WITH WATERTIGHT STOPPERS.
4. SERVICE LINES SHALL BE A MINIMUM 4" DIAMETER.
5. SERVICE SHALL BE EXTENDED TO WITHIN 1' TO 3' OF THE PROPERTY LINE IN ALLEYS AND STREETS. EXTENSION SHALL NOT BE REQUIRED IN EASEMENTS UNLESS SO DESIGNATED ON THE PLANS.
6. ALL TRENCHES UNDER OR WITHIN 2' OF AN EXISTING OR PROPOSED PAVED SURFACE SHALL BE BACKFILLED WITH TRENCH BACKFILL MATERIAL.
7. INSTALLATION DETAILS SHOWN ON STANDARDS #2050 AND #2070.
8. HOUSE LATERAL SHALL NOT OUTFALL INTO MANHOLES.

CITY OF DECATUR, ILLINOIS
DEPARTMENT OF ENGINEERING & INFRASTRUCTURE

ISSUED: 7-3-01
REVISIONS BY | DATE
K.G.O. 11/4/00
KSG 02/2002

ADOPTED JANUARY 1, 2003

STANDARD# 2080

STANDARD DESIGN
INLET
TYPE A

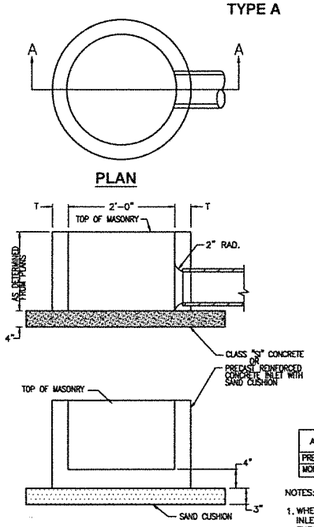

SECTION A-A

ALTERNATE MATERIALS FOR WALLS	T
PRECAST REINFORCED CONCRETE SECTION	3"
MONOLITHIC CONCRETE	6"

NOTES:

1. WHEN USING A PRECAST REINFORCED CONCRETE INLET, THE CONTRACT UNIT PRICE SHALL INCLUDE FURNISHING AND PLACING SAND CUSHION.
2. THE CONTRACT UNIT PRICE SHALL INCLUDE THE FRAME AND LID OR GRATE SPECIFIED ON PLANS.
3. ALL CONCRETE JOINTS IN THE STRUCTURE SHALL BE SEALED USING PERMACUM ROPE MASTIC OR APPROVED EQUAL. ADJUSTING RINGS AND THE CASTING SHALL BE SEALED USING 2 LOOPS OF 3/4" PERMACUM ROPE MASTIC.

CITY OF DECATUR, ILLINOIS
DEPARTMENT OF ENGINEERING & INFRASTRUCTURE

ISSUED:
REVISIONS BY | DATE
KSG 02/2002

ADOPTED JANUARY 1, 2003

STANDARD #3000

STANDARD DESIGN
FRAME AND GRATE
TYPE 3 & 3V

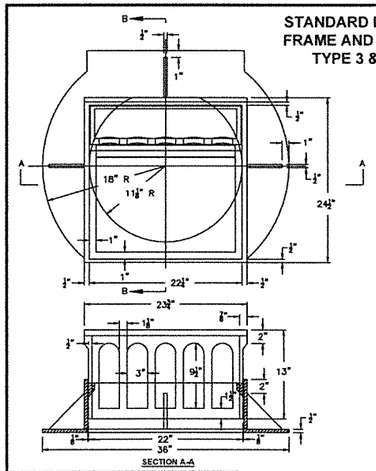

SECTION A-A

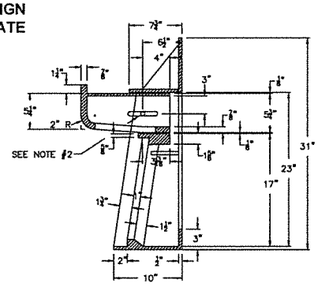

SECTION B-B

NOTES:

1. CURB BOX ADJUSTABLE FROM 5¾" TO 9".
2. CENTER LINE OF ⅝" DIA. HOLE AND ⅜" x 4¾" SLOTTED HOLE FOR GALVANIZED ½" BOLT, NUT AND WASHER.
3. TYPE GRATE 3V SHALL NOT BE INSTALLED IN A SAG.
4. THE CURB BOX SHALL BE STAMPED WITH "DUMP NO WASTE DRAINS TO RIVER" OR "DUMP NO WASTE DRAINS TO WATERWAY."

CITY OF DECATUR, ILLINOIS
DEPARTMENT OF ENGINEERING & INFRASTRUCTURE

ISSUED:
REVISIONS BY | DATE
F.K.T. 12/17/98
SKK 12/15/99
JAN 9/01/00

ADOPTED

STANDARD #3034
SHEET #1 OF 2

STANDARD DESIGN
FRAME AND GRATE
TYPE 3 & 3V

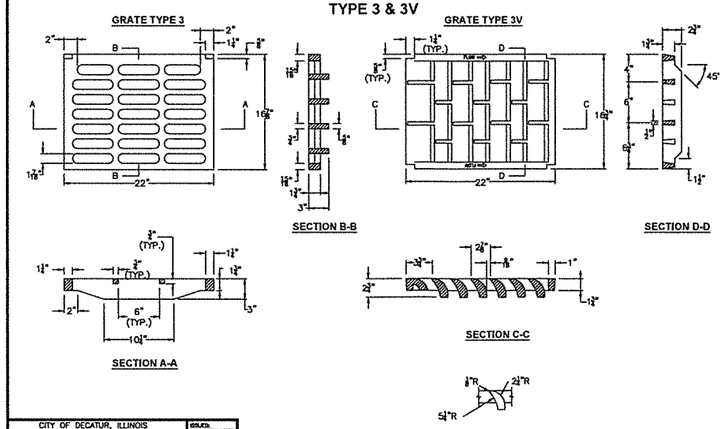

CITY OF DECATUR, ILLINOIS
DEPARTMENT OF ENGINEERING & INFRASTRUCTURE

ISSUED:
REVISIONS BY | DATE
F.K.T. 12/18/98
SKK 12/15/99
JAN 9/01/00

ADOPTED

STANDARD #3034
SHEET #2 OF 2

STANDARD DESIGN
PRECAST REINFORCED CONCRETE
FLARED END SECTION

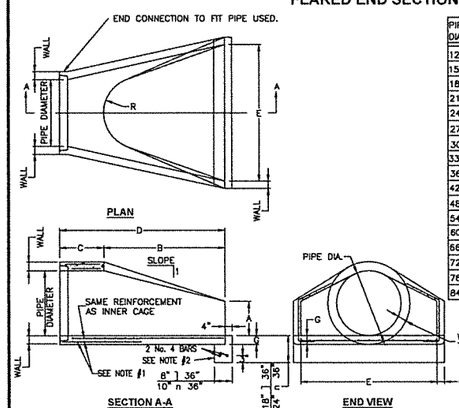

PIPE DIA.	WALL	A	B	C	D	E	G	R	SLOPE V:H
12"	2"	4"	24"	4'-0⅞"	5'-0⅞"	2'-0"	2"	9"	1:2.4
15"	2¼"	6"	27"	3'-10"	6'-1"	2'-6"	2¼"	11"	1:2.4
18"	2½"	9"	27"	3'-10"	6'-1"	3'-0"	2½"	12"	1:2.4
21"	2¾"	9"	35"	38"	6'-1"	3'-6"	2¾"	13"	1:2.4
24"	3"	9½"	3'-7½"	30"	6'-½"	4'-0"	3"	14"	1:2.5
27"	3¼"	10½"	4'-0"	2'5½"	6'-1½"	4'-6"	3¼"	14½"	1:2.4
30"	3½"	12"	4'-6"	1'9¾"	6'-1¾"	5'-0"	3½"	15"	1:2.5
33"	3¾"	1'3½"	4'-10½"	3'9¾"	6'-1¾"	5'-6"	3¾"	1'7½"	1:2.5
36"	4"	15"	5'-3"	3'4¾"	6'-1¾"	6'-0"	4"	20"	1:2.5
42"	4½"	21"	5'-3"	35"	8'-2"	6'-6"	4½"	22"	1:2.5
48"	5"	24"	6'-0"	26"	8'-2"	7'-0"	5"	22"	1:2.5
54"	5½"	27"	5'-5"	35"	8-4"	7'-6"	5½"	24"	1:2.0
60"	6"	35"	5'-0"	39"	8-3"	8'-0"	5"	*	1:1.9
66"	6½"	30"	6'-0"	27"	8-3"	8'-6"	5½"	*	1:1.7
72"	7"	36"	6'-6"	21"	8-3"	9'-0"	7"	*	1:1.8
78"	7½"	36"	7'-6"	21"	9'-3"	9'-6"	6½"	*	1:1.8
84"	8"	36"	7'-6½"	21"	9'-3½"	10'-0"	6½"	*	1:1.6

* RADIUS AS FURNISHED BY MANUFACTURER

NOTES:

1. STANDARD REINFORCEMENT SHALL CONFORM TO REQUIREMENTS FOR CIRCULAR CLASS III, WALL B REINFORCED CONCRETE PIPE.
2. END BLOCK SHALL BE PRECAST OR CAST IN PLACE.
3. PRECAST CONCRETE FLARED END SECTION SHALL CONFORM TO THE APPLICABLE REQUIREMENTS OF AASHTO M-170 CLASS III, WALL B REINFORCED CONCRETE PIPE.

CITY OF DECATUR, ILLINOIS
DEPARTMENT OF ENGINEERING & INFRASTRUCTURE

ISSUED:
REVISIONS BY | DATE
F.K.T. 12/15/98
SKK 12/15/99
JAN 11/2/00

ADOPTED 2003

STANDARD# 3073

BY	DATE	REVISION/ISSUED
CR	1/22/2018	PRELIM PLAT RESUBMITTAL

PROJECT NO.	6615
FIELD BOOK NO.	XXX
START DATE	FEBRUARY 27, 2017
DRAWN BY	LPJ
CHECKED BY	MEC
C&A REF. NO.	5899
PWC REF. NO.	0596-6136
FILE LOCATION	P:\MEC\FILES\KSM\KOSSER

CHASTAIN & ASSOCIATES LLC
CONSULTING ENGINEERS
DECATUR (217) 422-8544
SCHAUMBURG (773) 714-0050
ROCKFORD (815) 489-0050
184-001397

DETAILS

SOUTHEAST PLACE
FITZGERALD RD. & IL RT. 121
DECATUR, IL

sheet no. C-12

project no. 6615

LONG CREEK TOWNSHIP WATER DEPARTMENT

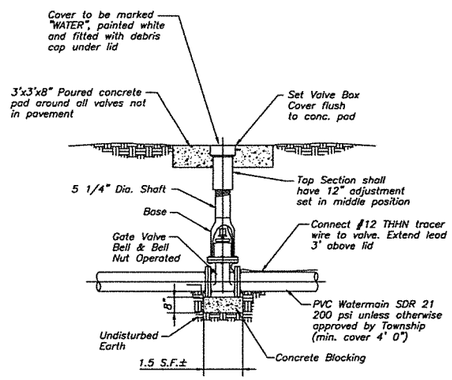

TYPICAL GATE VALVE AND VALVE BOX

December 1997

LONG CREEK TOWNSHIP WATER DEPARTMENT

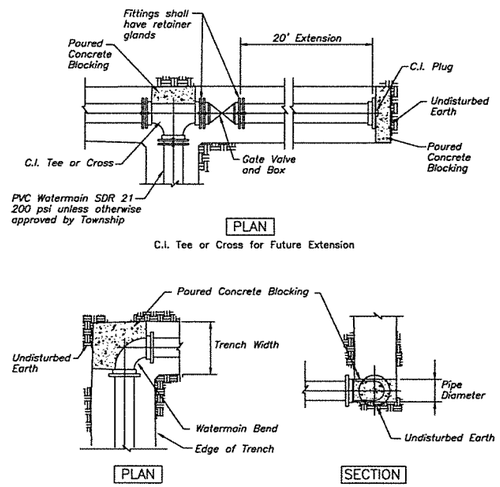

STANDARD DESIGN CONCRETE BLOCKING

December 1997

LONG CREEK TOWNSHIP WATER DEPARTMENT

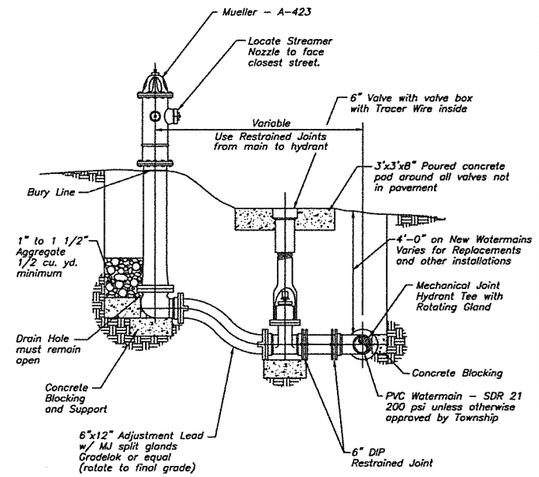

TYPICAL FIRE HYDRANT AND GATE VALVE WITH ADJUSTMENT LEAD

December 1997

LONG CREEK TOWNSHIP WATER DEPARTMENT

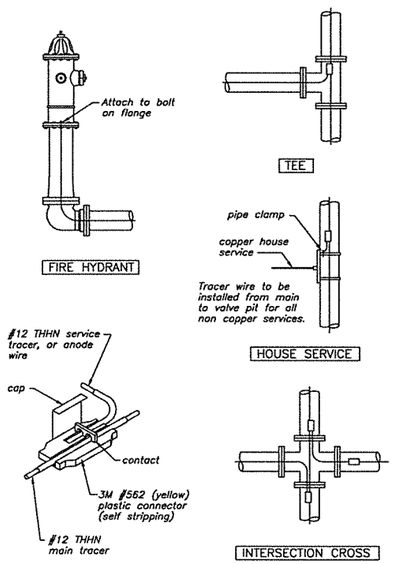

TRACER DETAIL FOR PVC PIPE

December 1997

LONG CREEK TOWNSHIP WATER DEPARTMENT

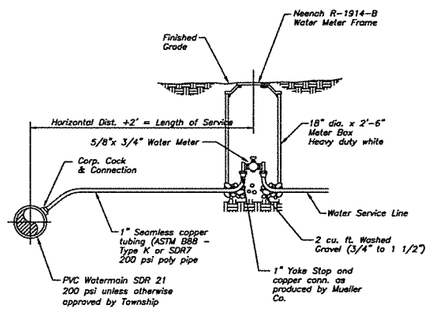

NOTES:

1. Corporation Cock will be Mueller H-15000 or approved equal Tap to be placed at 2 or 10 o'clock.
2. Curb Stops shall be Mueller H-15151 or approved equal.
3. Curb Box shall be Oriseal H-10387 or approved equal.
4. Service Saddles shall be Mueller H-16000 or approved equal for PVC Pipe.
5. Dirt to be hand tamped around corp cock.
6. All connections to be flare or compression copper or compression with insert.

STANDARD DESIGN DOMESTIC WATER SERVICE

December 1997

LONG CREEK TOWNSHIP WATER DEPARTMENT

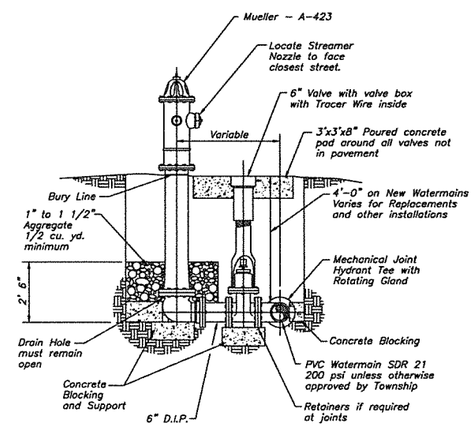

TYPICAL FIRE HYDRANT AND GATE VALVE SETTING

December 1997

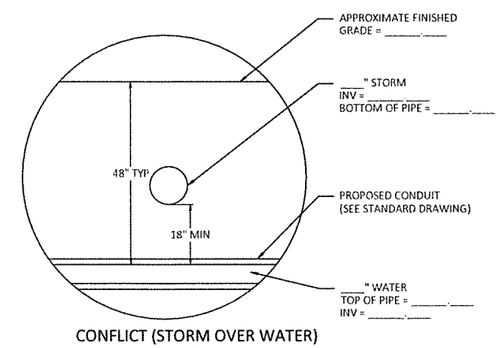

CONFLICT (STORM OVER WATER)
(NOT TO SCALE)

BY	DATE	REVISION/ISSUED
CR	1/22/2018	PRELIM PLAT RESUBMITTAL

PROJECT NO.	6615
FIELD BOOK NO.	XXX
START DATE	FEBRUARY 27, 2017
DRAWN BY	LP
CHECKED BY	MEC
C&A REF. NO.	5899
PVC REF. NO.	694, 6136
FILE LOCATION	J:\DEVELOPER\STANCOSSER

CHASTAIN & ASSOCIATES LLC
CONSULTING ENGINEERS
DECATUR (217) 422-8544
SCHAUMBURG (773) 774-0050
ROCKFORD (815) 489-0059
184-001397

DETAILS

SOUTHEAST PLACE
FITZGERALD RD. & IL RT. 121
DECATUR, IL

sheet no.
C-13

project no.
6615

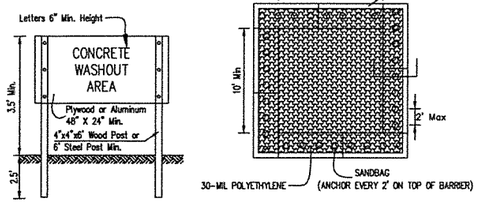

SIGN DETAIL

PLAN VIEW

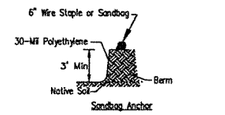

EARTHEN BERM ANCHOR SECTIONS

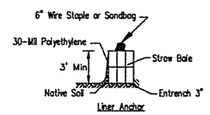

STRAW BALE ANCHOR SECTIONS

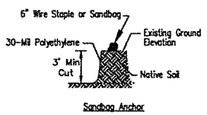

SUBGRADE ANCHOR SECTIONS

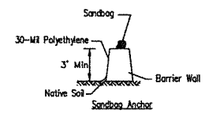

BARRIER WALL ANCHOR SECTION

NOTES:

1. Maintaining temporary concrete washout facilities shall include removing and disposing of hardend concrete and/or slurry and returning the facilities to a functional condition.
2. Facility shall be cleaned or reconstructed in a new area once washout becomes two-thirds full.

TEMPORARY CONCRETE WASHOUT FACILITY

STABILIZED CONSTRUCTION ENTRANCE PLAN

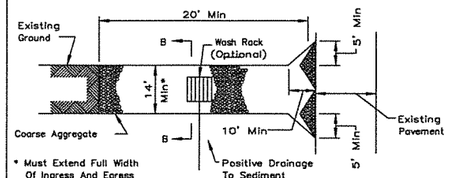

PLAN VIEW

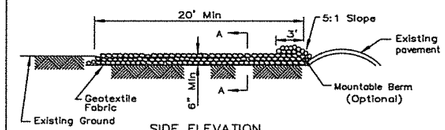

SIDE ELEVATION

NOTES:

1. Filter fabric shall meet the requirements of material specification 592 GEOTEXTILE, Table I or 2, Class , I ofl dwd shall be placed over the cleared area prior to the placing of rock.
2. Rock or reclaimed concrete shall meet one of the following IDOT coarse aggregate gradation, CA-1, CA-2, CA-3 or CA-4 and be placed according to construction specification 25 ROCKFILL using placement Method 1 and Class III compaction.
3. Any drainage facilities required because of washing shall be constructed according to manufacturers specifications.
4. If wash racks are used they shall be installed according to the manufactures specifications.

REFERENCE		U.S. DEPARTMENT OF AGRICULTURE SOIL CONSERVATION SERVICE ILLINOIS	STANDARD DWG. NO. IL-630 SHEET 1 OF 2 DATE 8-18-94
Project			
Designed	Date		
Checked	Date		
Approved	Date		

STABILIZED CONSTRUCTION ENTRANCE PLAN

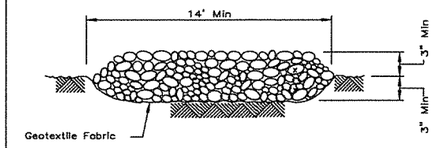

SECTION A–A

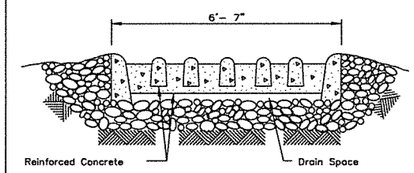

SECTION B–B

REFERENCE		U.S. DEPARTMENT OF AGRICULTURE SOIL CONSERVATION SERVICE ILLINOIS	STANDARD DWG. NO. IL-630 SHEET 2 OF 2 DATE 8-18-94
Project			
Designed	Date		
Checked	Date		
Approved	Date		

BY	DATE	REVISION/ISSUED
CR	1/22/2018	PRELIM PLAT RESUBMITTAL

PROJECT NO.	6615
FIELD BOOK NO.	XXX
START DATE	FEBRUARY 27, 2017
DRAWN BY	LPJ
CHECKED BY	MEC
C&A REF. NO.	5899
PWC REF. NO.	604, 6136
FILE LOCATION	J:\DEVELOPER\STAGE\SER

CHASTAIN & ASSOCIATES LLC
CONSULTING ENGINEERS
DECATUR (217) 422-8544
SCHAUMBURG (773) 714-0050
ROCKFORD (815) 489-0050
184-001397

DETAILS

SOUTHEAST PLACE
FITZGERALD RD. & IL RT. 121
DECATUR, IL

sheet no.
C-14

project no.
6615